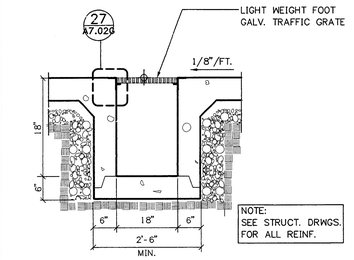

26 A7.02G SUMP PIT- SECTION
3/4"=1'-0"

ESF_9101

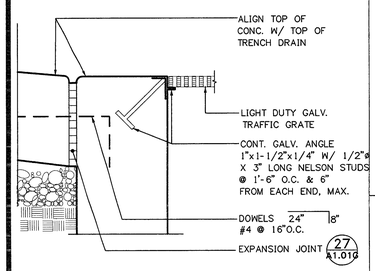

27 A7.02G EDGE OF GRATE
3"=1'-0"

ESF_9104

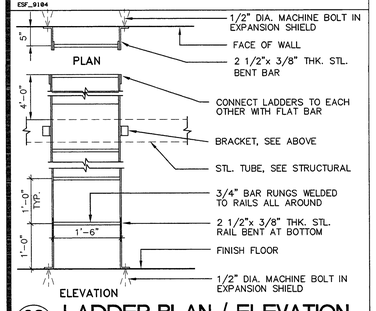

28 A7.02G LADDER PLAN / ELEVATION
3/4"=1'-0"

ESF_9108

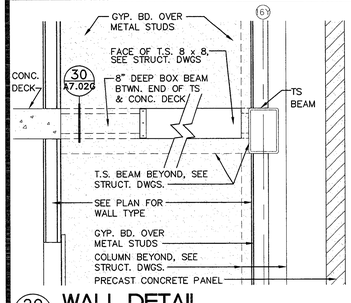

29 A7.02G WALL DETAIL
3/4"=1'-0"

ESF_9110

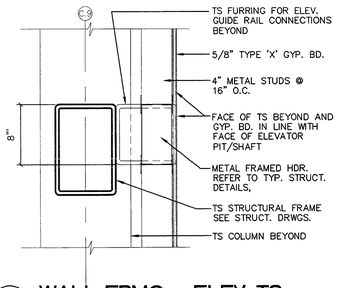

30 A7.02G WALL FRMG. @ ELEV. TS
1 1/2"=1'-0"

ESF_9114

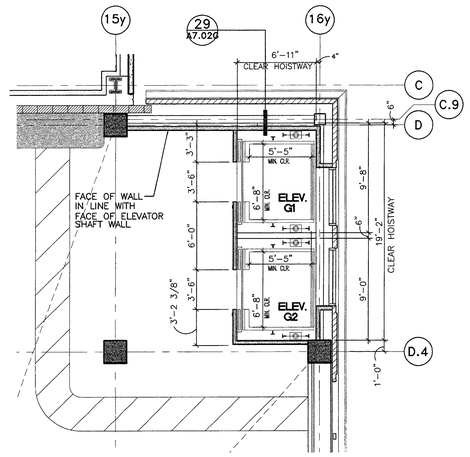

C A7.02G THIRD LEVEL ELEVATOR (LEVELS 4-7, SIM.)
3/16"=1'-0"

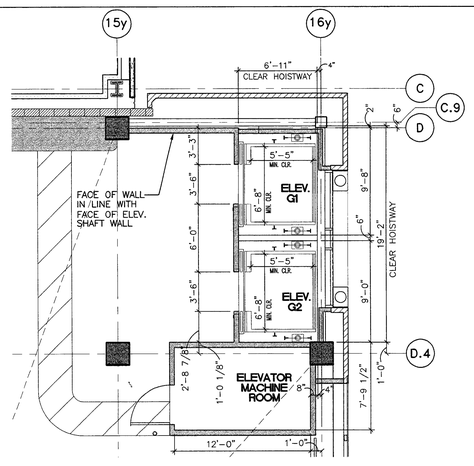

D A7.02G SECOND LEVEL ELEVATOR
3/16"=1'-0"

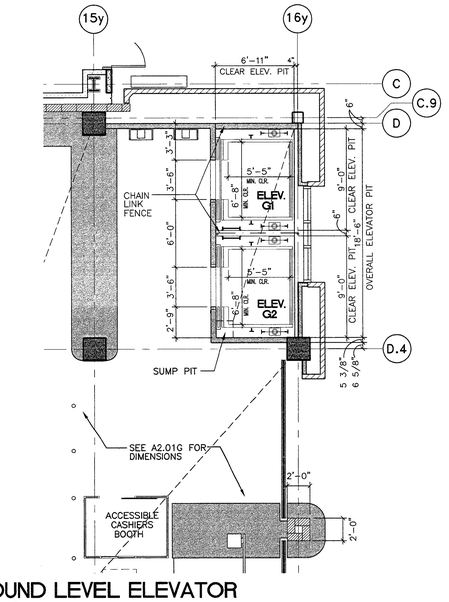

E A7.02G GROUND LEVEL ELEVATOR
3/16"=1'-0"

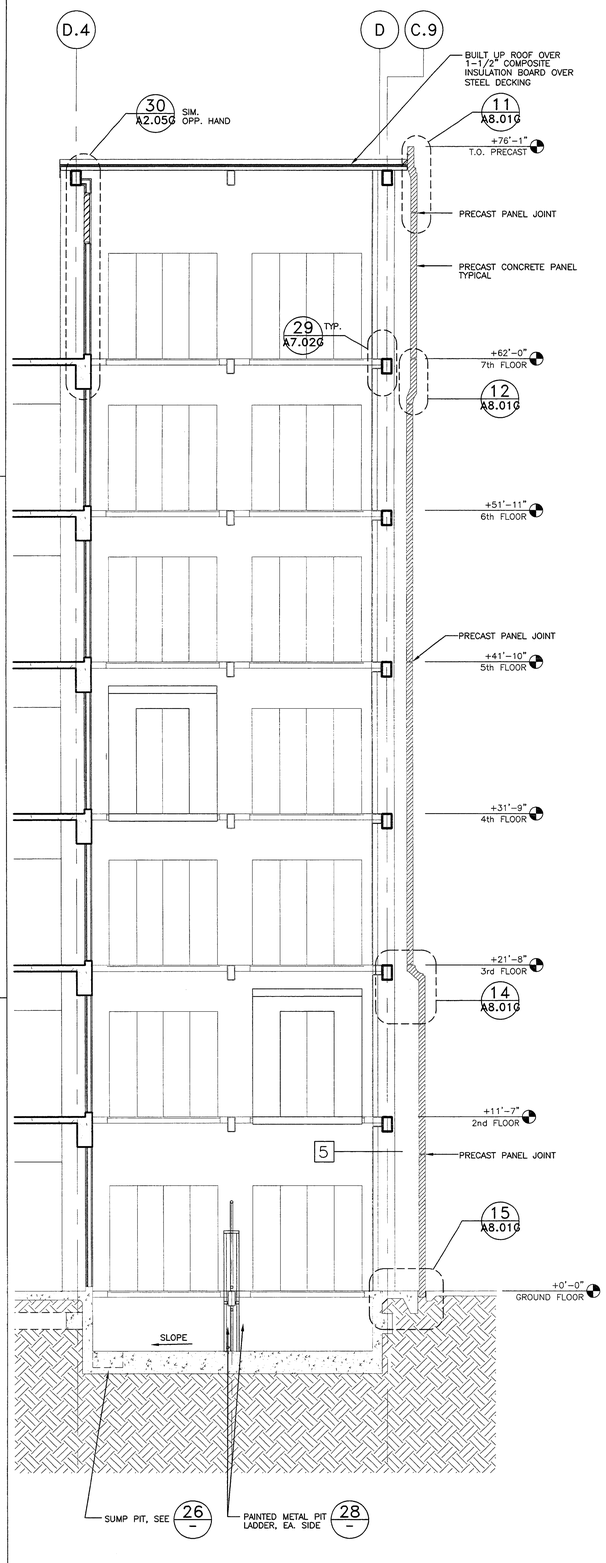

B A7.02G WALL/ELEVATOR SECTION
1/4"=1'-0"

WSEC_06G

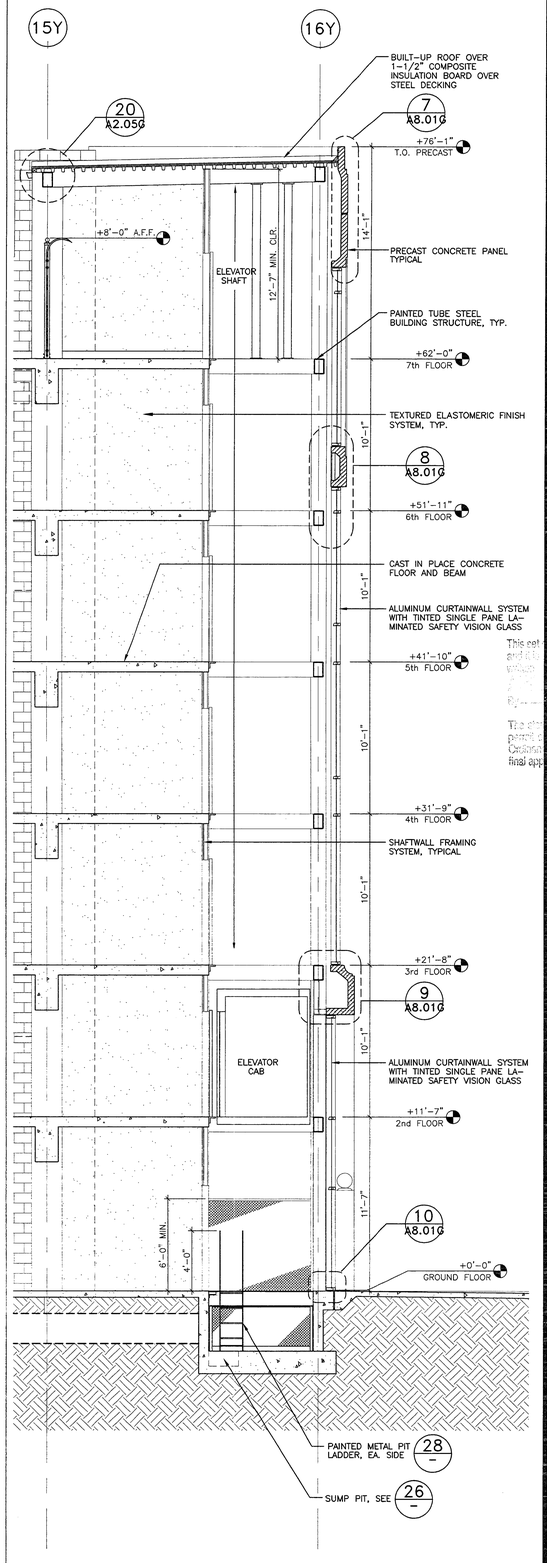

A A7.02G WALL/ELEVATOR SECTION
1/4"=1'-0"

WSEC_03G

PLANS REVIEWED BY Precision Inspection Company Inspection and Consulting Services
Page 20 Of 28

ENGLISH HARPER RETA
ARCHITECTS

580 UNIVERSITY AVENUE SUITE 100
SACRAMENTO, CA 95825 (916) 568-1821

THIS DRAWING IS NOT FINAL OR TO BE USED FOR CONSTRUCTION UNTIL IT IS SIGNED BY THE ARCHITECT AND THE OWNER.

ARCHITECT
EDWARD P. ENGLISH C-10399
RICHARD L. HARPER C-13830
RONALD A. RETA C- 9879

OWNER

CONTRACTOR

LICENSED ARCHITECT RICHARD L. HARPER No. C-13830 REN. 3-31-01 STATE OF CALIFORNIA

Turner Construction Company

This set of plans and calculations MUST be kept on the job at all times and it is unlawful for any person to make any changes or alterations on same, or to deviate therefrom except after obtaining written permission and approval from the enforcing agency for the proposed change. Any person making changes without such permission and approval may be held liable under the penalty provisions of any applicable state or local law. Changes made without permission are not permitted until after final approval.

JOB SITE COPY

Essential Services Facility (UNDER SEPARATE DOCUMENT PACKAGE)

Parking Garage

KEY PLAN

DATE	NO.	DESCRIPTION
1-13-2000	3	OVERALL PERMIT SET
11-15-99	2	OVERALL PLAN CHECK SET
10-18-99	1	PROGRESS SET

REVISIONS

DRAWN BY
JM

CHECKED BY

Parking Garage
15 North El Dorado Street, Stockton, California
PROGRESS PRINT

DRAWING
PARKING GARAGE ELEVATOR SECTIONS AND DETAILS

PROJECT NO. 98113
DRAWING NO. A7.02G
CADFILE A7_02G
DATE 7 SEPTEMBER 1999

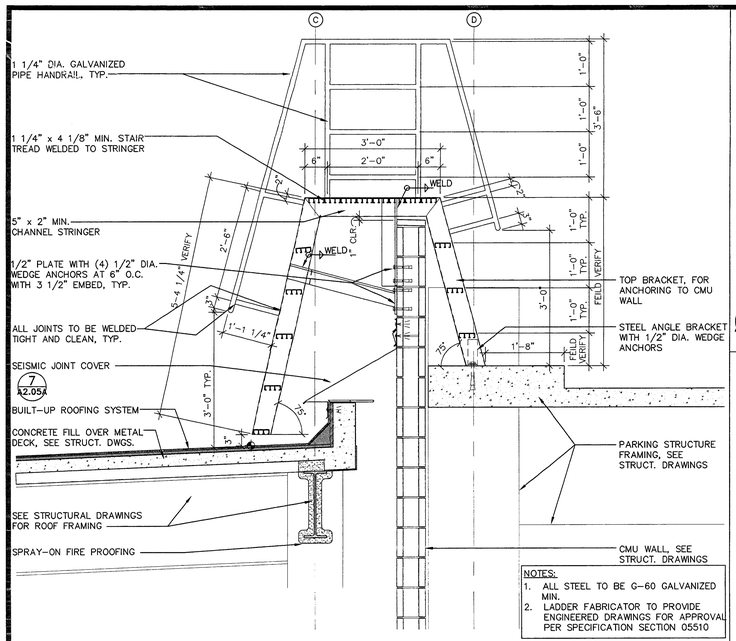

27 A8.01G SHIP LADDER DETAIL
3/4"=1'-0"
ESF_8040

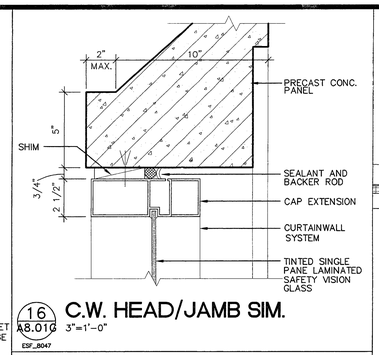

16 A8.01G C.W. HEAD/JAMB SIM.
3"=1'-0"
ESF_8047

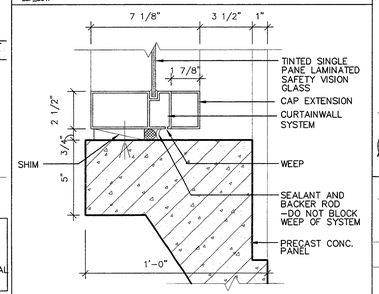

17 A8.01G C.W. SILL
3"=1'-0"
ESF_8048

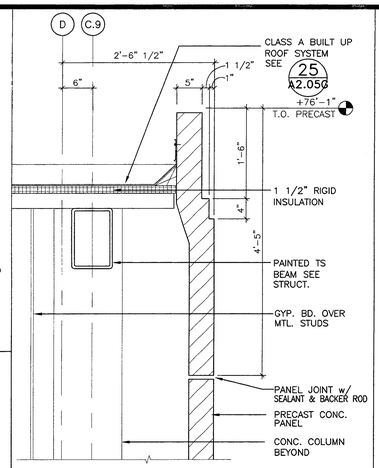

11 A8.01G PRECAST CONCRETE PANEL
1"=1'-0"
WSEC_06G

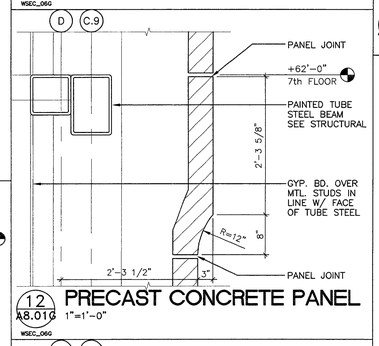

12 A8.01G PRECAST CONCRETE PANEL
1"=1'-0"
WSEC_06G

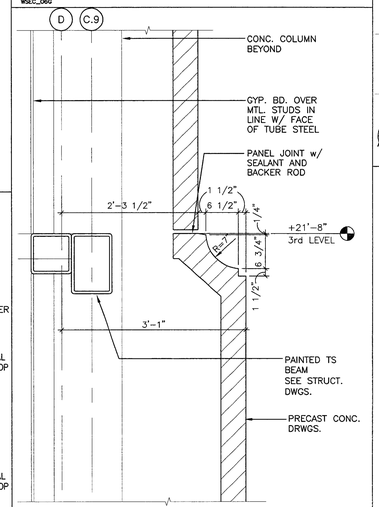

14 A8.01G PRECAST CONCRETE PANEL
1"=1'-0"
WSEC_06G

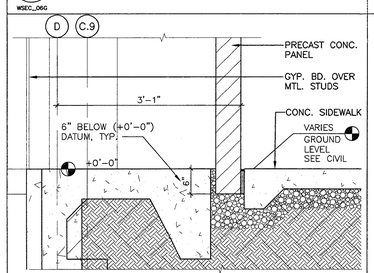

15 A8.01G PRECAST PANEL BASE
1"=1'-0"
WSEC_06G

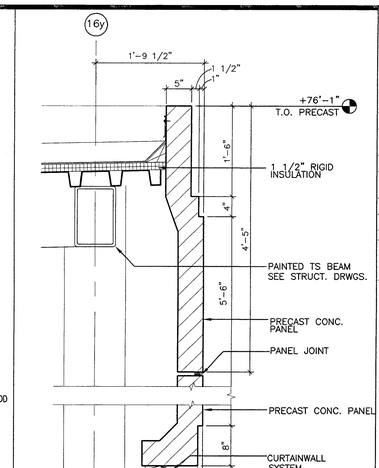

7 A8.01G PRECAST CONCRETE PANEL
1"=1'-0"
WSEC_XX

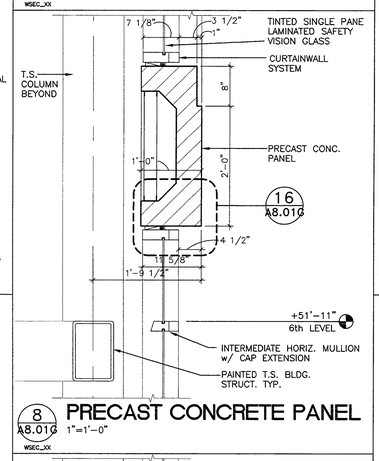

8 A8.01G PRECAST CONCRETE PANEL
1"=1'-0"
WSEC_XX

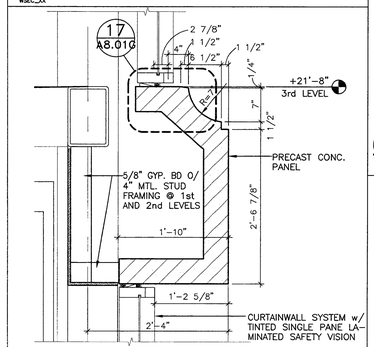

9 A8.01G PRECAST CONCRETE PANEL
1"=1'-0"
WSEC_XX

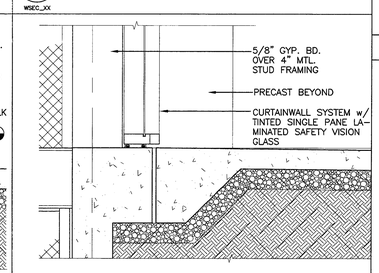

10 A8.01G CURTAINWALL SILL
1"=1'-0"
BSEC_03G

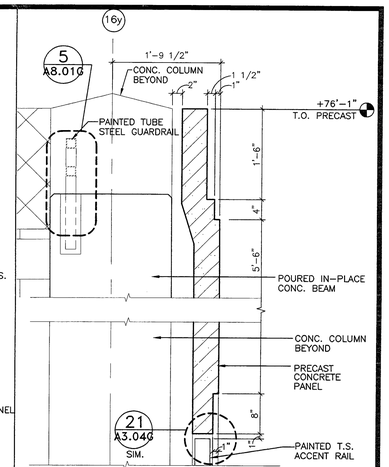

2 A8.01G PRECAST CONCRETE PANEL
1"=1'-0"

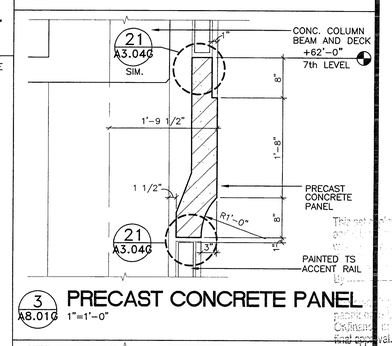

3 A8.01G PRECAST CONCRETE PANEL
1"=1'-0"

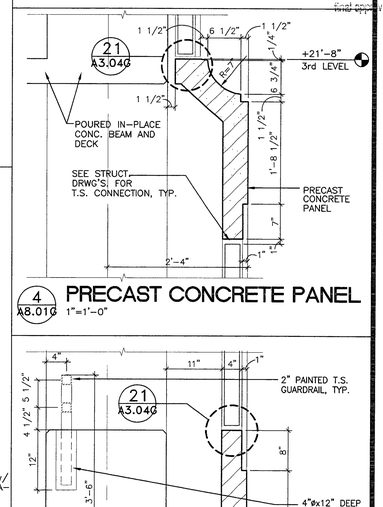

4 A8.01G PRECAST CONCRETE PANEL
1"=1'-0"

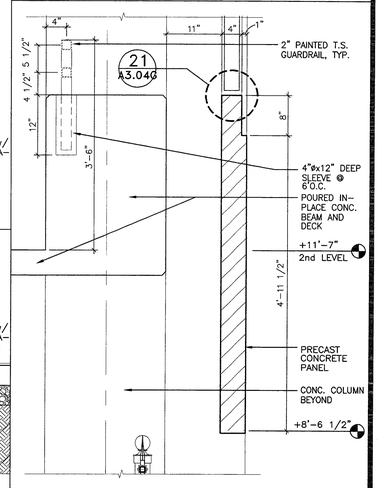

5 A8.01G PRECAST CONCRETE PANEL
1"=1'-0"

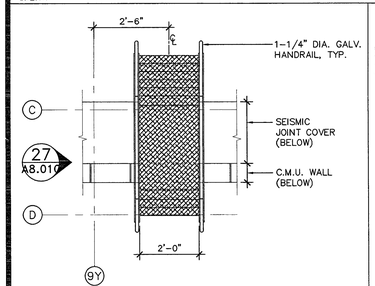

28 A8.01G SHIP LADDER (PLAN)
1/2"=1'-0"
ESF_8043

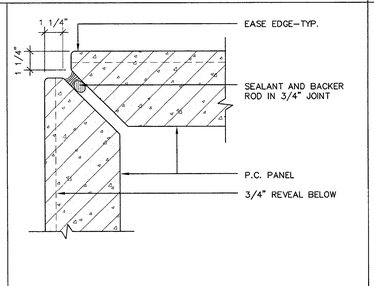

23 A8.01G CORNER @ P.C. PANEL
3"=1'-0"
ESF_8044

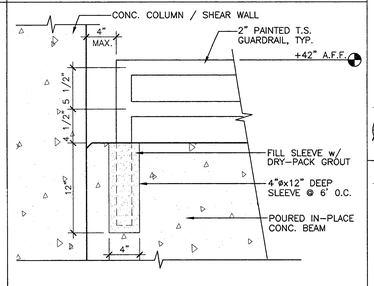

18 A8.01G GUARDRAIL END CONDITION
1 1/2"=1'-0"
ESF_8064

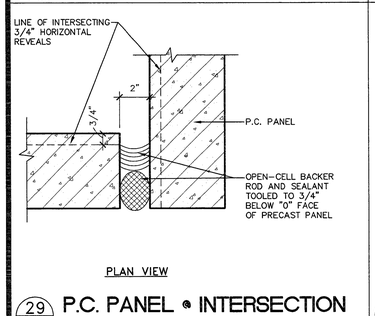

PLAN VIEW

29 A8.01G P.C. PANEL @ INTERSECTION
3"=1'-0"
ESF_8065

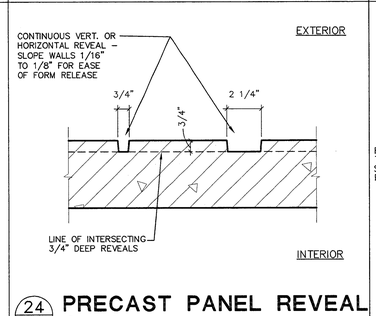

24 A8.01G PRECAST PANEL REVEAL
3" = 1'-0"
ESF_8045

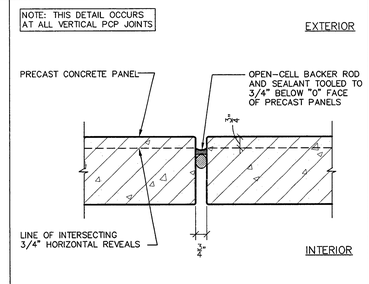

25 A8.01G PRECAST PANEL JOINT
3" = 1'-0"
ESF_8046

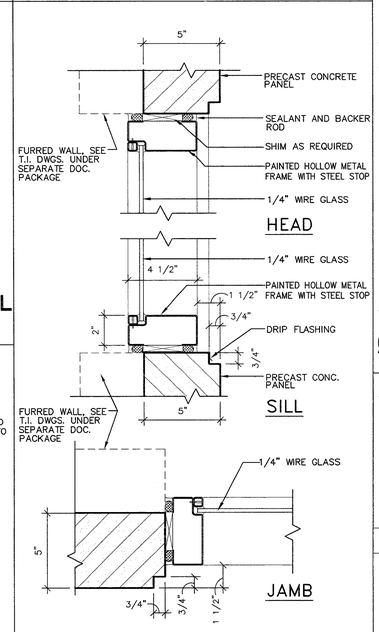

20 A8.01G HEAD/JAMB/ SILL
3"=1'-0"
ESF_8049

ENGLISH HARPER RETA
ARCHITECTS

580 UNIVERSITY AVENUE SUITE 100
SACRAMENTO, CA 95825 (916) 568-1821

THIS DRAWING IS NOT FINAL OR TO BE USED FOR CONSTRUCTION UNTIL IT IS SIGNED BY THE ARCHITECT AND THE OWNER.

ARCHITECT
EDWARD P. ENGLISH C-10399
RICHARD L. HARPER C-13830
RONALD A. RETA C- 9879

OWNER

CONTRACTOR

REGISTERED ARCHITECT RICHARD L. HARPER No. C-13830 REN. 3-31-00 STATE OF CALIFORNIA

Turner Construction Company

This set of plans is not to be used for construction purposes until it has been approved by the Building Department. Any changes, additions or deletions not approved by the Building Department will void this approval. Copying of plans is not permitted until after final approval.

JOB SITE COPY

Essential Services Facility
(UNDER SEPARATE DOCUMENT PACKAGE)
Parking Garage

KEY PLAN

DATE	NO.	DESCRIPTION
1-13-2000	3	OVERALL PERMIT SET
11-15-99	2	OVERALL PLAN CHECK SET
10-18-99	1	PROGRESS SET

REVISIONS
DRAWN BY JM
CHECKED BY

Parking Garage
15 North El Dorado Street, Stockton, California
PROGRESS PRINT

DRAWING
PARKING GARAGE
PRECAST CONCRETE
PANEL PROFILES / DETAILS

PROJECT NO. 98113
DRAWING NO. A8.01G
CADFILE A8_01G
DATE 7 SEPTEMBER 1999

Precision Inspection Company
Inspection and Consulting Services

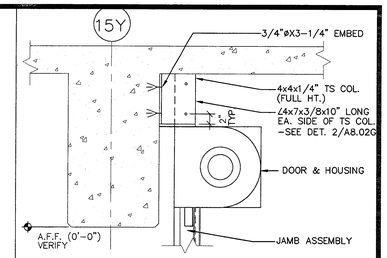

NOTE:
PRIOR TO DRILLING FOR EXPANSION ANCHORS IN POST TENSIONED ELEVATED SLABS AND/OR BEAMS, CONTRACTOR SHALL CAREFULLY LOCATE TENDONS TO AVOID CONFLICT OR DAMAGE. MAINTAIN 2" MINIMUM CLEARANCE TO ANY TENDONS.

1 / A8.02G — ESF_8091 — 1"=1'-0"

COILING DOOR HEAD G139 (TOP OF SOUTH JAMB)

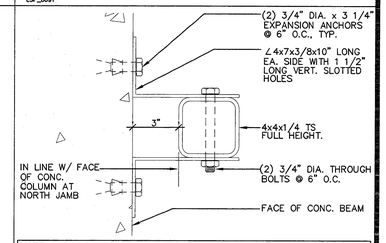

NOTE:
PRIOR TO DRILLING FOR EXPANSION ANCHORS IN POST TENSIONED ELEVATED SLABS AND/OR BEAMS, CONTRACTOR SHALL CAREFULLY LOCATE TENDONS TO AVOID CONFLICT OR DAMAGE. MAINTAIN 2" MINIMUM CLEARANCE TO ANY TENDONS.

2 / A8.02G — ESF_8090 — 3/4"=1'-0"

TUBE STEEL ø DOOR G139 (TOP OF SOUTH JAMB)

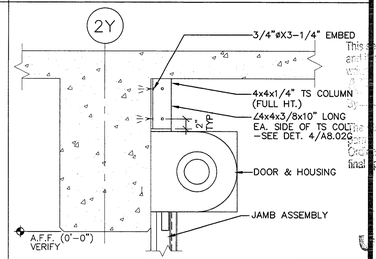

NOTE:
PRIOR TO DRILLING FOR EXPANSION ANCHORS IN POST TENSIONED ELEVATED SLABS AND/OR BEAMS, CONTRACTOR SHALL CAREFULLY LOCATE TENDONS TO AVOID CONFLICT OR DAMAGE. MAINTAIN 2" MINIMUM CLEARANCE TO ANY TENDONS.

3 / A8.02G — ESF_8087 — 1"=1'-0"

COILING DOOR HEAD G104 (TOP OF SOUTH JAMB)

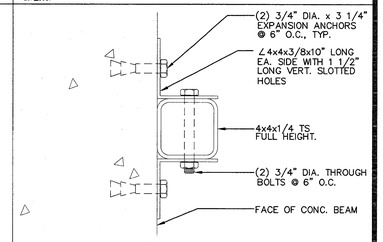

NOTE:
PRIOR TO DRILLING FOR EXPANSION ANCHORS IN POST TENSIONED ELEVATED SLABS AND/OR BEAMS, CONTRACTOR SHALL CAREFULLY LOCATE TENDONS TO AVOID CONFLICT OR DAMAGE. MAINTAIN 2" MINIMUM CLEARANCE TO ANY TENDONS.

4 / A8.02G — ESF_8088 — 3/4"=1'-0"

TUBE STEEL ø DOOR G104 (TOP OF SOUTH JAMB)

PLANS REVIEWED BY
Precision Inspection Company
Inspection and Consulting Services
Page 30 of 118

ENGLISH HARPER RETA
ARCHITECTS

580 UNIVERSITY AVENUE SUITE 100
SACRAMENTO, CA 95825 (916) 568-1821

THIS DRAWING IS NOT FINAL OR TO BE USED FOR CONSTRUCTION UNTIL IT IS SIGNED BY THE ARCHITECT AND THE OWNER.

ARCHITECT
EDWARD P. ENGLISH C-10399
RICHARD L. HARPER C-13830
RONALD A. RETA C- 9879

OWNER

CONTRACTOR

LICENSED ARCHITECT RICHARD L. HARPER No. C-13830 EXP. 3-31-01 STATE OF CALIFORNIA

Turner Construction Company

This set of plans and specifications MUST be kept on the job at all times and it is unlawful for any person to make any changes or alterations on the same, or any part thereof, except as authorized by the Architect. The reuse of these plans for any other project is prohibited. Any use of these plans without the written consent of the Architect will be held to be a violation of the Copyright Act and subject to penalties as provided therein. Acceptance of Work Drawings shall not be construed as permitting any departure from the Contract Requirements or relieving the Contractor of responsibility for any errors or omissions in the Work Drawings. Work shall not be permitted until after final approval.

CONFORMED COPY

Essential Services Facility
(UNDER SEPARATE DOCUMENT PACKAGE)

Parking Garage

KEY PLAN

DATE	NO.	DESCRIPTION
1-13-2000	3	OVERALL PERMIT SET
11-15-99	2	OVERALL PLAN CHECK SET
10-18-99	1	PROGRESS SET

REVISIONS

DRAWN BY
JM

CHECKED BY

Parking Garage
15 North El Dorado Street, Stockton, California
PROGRESS PRINT

DRAWING
PARKING GARAGE EXTERIOR DETAILS

PROJECT NO. 98113
DRAWING NO. A8.02G
CADFILE A8_02G
DATE 7 SEPTEMBER 1999

GENERAL NOTES

APPLICABLE TO ALL DRAWINGS UNLESS NOTED OR SHOWN OTHERWISE

GENERAL NOTES

1001N01-1

1. Interpretation of Drawings & Specifications
   a) For convenience, specifications have been prepared for this project and are arranged in several sections, but such separation shall not be considered as the limits of the work required of any separate trade. The terms and conditions of such limitations are wholly between the contractor and his subcontractors.
   b) In general, the working details will indicate dimensions, position and kind of construction, and the specifications, qualities and methods. Any work indicated on the working details and not mentioned in the specifications, or vice versa, shall be furnished as though fully set forth in both. Work not particularly detailed, marked or specified, shall be the same as similar parts that are detailed, marked or specified. If conflicts occur on drawings and/or specifications, the most expensive materials or methods will prevail.
   c) Should an error appear in the working details or specifications or in work done by others affecting this work, the Contractor shall notify the Architect at once and in writing. If the Contractor proceeds with the work so affected without having given such written notice and without receiving the necessary approval, decision or instructions in writing from the Owner, then he shall have no valid claim against the Owner, for the cost of so proceeding and shall make good any resulting damage or defect. No verbal approval, decision, or instruction shall be valid or be the basis for any claim against the Owner, its officers, employees or agents. The foregoing includes typical errors in the specifications or notational errors in the working details where the interpretation is doubtful or where the error is sufficiently apparent as to place a reasonably prudent contractor on notice that, should he elect to proceed, he is doing so at his own risk.
2. Construction shall conform to all applicable codes and regulations.
3. Shop Drawing Note:
   a) Shop Drawings shall be submitted in the form of one sepia transparency and two blue line prints of each sheet.
   b) The purpose of Shop Drawings submittals by the Contractor is to demonstrate to the Structural Engineer that he understands the design concept by indicating which material he intends to furnish and install, and by detailing the fabrication and installation methods he intends to use.
   c) Prior to fabrication, Shop Drawings shall be submitted for review by the Structural Engineer. Shop Drawing submittals shall include, but are not necessarily limited to, structural steel, reinforcing steel, & glued laminated beams.
   d) Prior to submission the Contractor shall review all submittals for conformance with the Contract Documents and shall stamp submittals as being "Reviewed for Conformance".
   e) Shop Drawings submittals processed by the Structural Engineer are not Change Orders.
   f) Any detail on the Shop Drawing that deviates from the Contract Documents shall clearly be marked with the note "This a change".
   g) Shop drawings or calculations submitted for review that require resubmittal for re-review shall be billed hourly to the Owner and/or Contractor. Re-review will not proceed without written approval from the General Contractor for additional engineering review services.
4. Safety Note:
   a) It is the Contractors responsibility to comply with the pertinent sections, as they apply to this project, of the "Construction Safety Orders" issued by the State of California latest edition, and all OSHA requirements.
   b) The Owner and the Structural Engineer do not accept any responsibility for the Contractor's failure to comply with these requirements.
   c) The Contractor shall be responsible for adequate design and construction of all forms and shoring required.
5. The contractor shall notify the Architect and Structural Engineer where a conflict or discrepancy occurs between the Structural drawings and any other portion of the Contract Documents or existing field conditions. Such notification shall be given in due time so as not to affect the construction schedule. In case of a conflict between Structural drawings and specifications the more restrictive condition shall take precedence unless written approval has been given for the least restrictive. Contractor shall verify all dimensions with Architect prior to commencing any work.
6. Where no specific detail is shown, the construction shall be identical or similar to that indicated for like cases of construction on this project. Should there be any question, contact the Architect and Structural Engineer prior to proceeding.
7. When construction attaches to an existing building, a complete set of drawings of the existing building shall be kept on the job site. Contractor to obtain these drawings from the Owner.
8. Contractor shall provide an allowance equal to 2% of the bid for structural steel, misc. iron and reinforcing steel to be used at the discretion of the Structural Engineer. Unused amount to revert to the Owner upon completion of the job.
9. Any substitutions for structural members, hardware or details shall be reviewed by the Architect and Structural Engineer. Such review will be billed on a time and materials basis to the General Contractor with no guarantee that the substitution will be allowed.
10. Do not scale drawings. Contact the Architect or Structural Engineer for any dimensions not shown.
11. These drawings are not complete until reviewed and accepted by local Building Officials and signed by the Owner and the Structural Engineer.

ABBREVIATIONS

1005N03-1

AB	Anchor Bolt	MI	Malleable Iron
abv	Above	(n)	New
blw	Below	NIC	Not in Contract
bof	Bottom of Footing	NS	Near Side
btwn	Between	nts	Not to Scale
cc	Center to Center	NW	Normal Weight
CJ	Control Joint	OH	Opposite Hand
clr	Clear	OSB	Oriented Strand Board
CMU	Concrete Masonry Unit	pc	Piece
CNJ	Construction Joint	pp	Partial Joint Penetration
cont	Continuous	PT	Pressure Treated
contr	Contractor	rwd	Redwood
cp	Complete Joint Penetration	SC	Slip Critical
csk	Countersink	sim	Similar
DF	Douglas Fir	SMS	Sheet Metal Screw
DL	Dead Load	SP	Structural Plywood
do	Ditto	stfnr	Stiffener
dwg	Drawing	stgrd	Staggered
(e)	Existing	t&b	Top & Bottom
EF	Each Face	t&g	Tongue & Groove
EJ	Expansion Joint	thrd	Threaded
El	Elevation	tn	Toe Nail
EN	Edge Nailing	to	Top of
eos	Edge of Slab	toc	Top of Concrete (slab uno)
eq	Equal	tof	Top of Footing or Top of Framing
EW	Each Way		
EWEF	Each Way Each Face	tos	Top of Steel
FB	Face of Block(or Brick) or Flat Bar	tow	Top of Wall
		TS	Tube Steel
FC	Face of Concrete or Framing Clip(Simpson A35)	uno	Unless Noted Otherwise
		w/	with
FF	Finish Floor	w/o	without
FS	Face of Stud or Far Side	wp	Work Point
ga	Gauge or gage	WS	Wood Screw
glb	Glued Laminated Beam	WWF	Welded Wire Fabric
hdr	Header	℄	Centerline
HSB	High Strength Bolt	▭	Plate
ht	Height	⊥F	Wide Flange
jh	Joist Hanger	#	Number or Pounds
LL	Live Load	sq	Square
LLH	Long Leg Horizontal	ø	Round
LLV	Long Leg Vertical	[illegible]	Cont Wood in Section
LS	Lag Screw	[illegible]	Wood Blocking in Section
LW	Light Weight	[illegible]	End of Wood Piece
MB	Machine Bolt	(a)	"member" above
mfr	Manufacturer	(b)	"member" below

DESIGN CRITERIA

1001N02-1

1. Codes and Standards
   1997 Uniform Building Code (UBC)
   1989 ACI
   1989 AISC
2. Vertical loads
   Roof Live Load = 20 psf
   Floor Live Load = 50 psf
   Live loads are reduced where permitted by code.
3. Lateral loads
   Seismic:
   Zone 3 ; Z = 0.3
   R = 3.5 ; I = 1.0
   Wind:
   75 mph – Exposure C
   I = 1.0
4. Soils Values
   See sheet S3.01 for precast concrete piles

TESTS AND INSPECTIONS

1. Tests and Inspections shall be provided by a qualified testing agency as required below and shall conform to the requirements of the 1997 U.B.C. Section 1701. Testing and inspection records shall be kept for all structural concrete in accordance with section 1928A.7 of the 1998 California Building Code.

Tests:	Inspections:
■ Fill Compaction	■ Footing Excavation
□ Reinforcing Steel	■ Pile/Pier Installation
■ Concrete	■ Reinforcement Placement
● ■ Structural Steel	■ Concrete Placement
■ Masonry	■ Shop Welding
■ Grout and Mortar	■ Field Welding
■ Epoxy & Expansion Anchors	■ High Strength Bolting
□ Shotcrete	■ Masonry Placement & Grouting
	■ Shear Stud Installation
	■ Epoxy & Expansion Anchors
	□ Shotcrete
	■ Anchor Bolts Installation @ Braced Frames

● All material and mill certificates shall be submitted prior to fabrication

All shop welds delivered to the site shall have a certificate of compliance from an ICBO approved agency.

FOUNDATIONS

1. All foundation work shall be done in accordance with the requirements of the Soils Report #S1150.001 by Geomatrix Consultants dated 9/99 with preliminary soils reports dated 1/19/99 and 1/29/99.
2. Foundations shall bear on driven precast concrete piles
   See notes and details on sheet S2.01 &S3.01
3. All filling, backfilling and compaction shall be done under the observation of the Soils Engineer and must be compacted to a minimum relative compaction of 90% in accordance with the procedure outlined in the soils report.
4. Building pad construction shall conform to the requirements of the soils report. The extent and depth of overexcavation and placement of engineered fill shall at a minimum be as shown on the plans. Final depth and extent of excavation and fill shall be determined at time of construction by a representative of the Soils Engineer. Foundation depths indicated on plans are for estimating purposes only.
5. Bottoms of all foundations shall be level. Changes in bottom of foundation elevation shall be made according to Stepped Footing Detail on the Typical Detail Sheet.
6. Per the Geotechnical report, pile caps and grade beams should be poured neat against excavation sidewalls (ie, without forming). Measures may be needed to prevent sloughing (such as, pouring pile caps soon after excavation, restricting foot and vehicle traffic near excavations, etc).
7. Notify the Structural Engineer 48 hours before casting foundations.
8. The Soils Engineer shall advise the Building Official in writing that:
   a. The building pad was prepared in accordance with the soils report.
   b. The utility trenches have been properly backfilled and compacted and;
   c. The foundation excavations, forming and reinforcement comply with the report and approved plan.

CONCRETE

1. Structural concrete shall attain 28 day compressive strength as required in note #26. Maximum slump shall not exceed 4 inches.
2. Concrete mix design shall be prepared by an independent laboratory and reviewed by the Structural Engineer.
3. Cement shall conform to ASTM C–150 type I or II.
4. Concrete aggregates shall conform to ASTM C–33 for normal weight and ASTM C–330 for light weight.
5. Non–shrink grout or drypack shall consist of a premixed nonmetallic formula.
6. Reinforcing steel shall conform to ASTM A–615 Grade 60 for #4 and larger, and ASTM A–615 Grade 40 for #3 and smaller, except reinforcing steel to be welded shall conform to ASTM A–706.
7. All preheating and welding of reinforcing bars shall be done in accordance with AWS D1.4 latest edition by welders approved by a qualified laboratory. Contractor shall furnish to the laboratory, rebar mill certificates.
8. Reinforcing steel shall be fabricated according to "Manual of Standard Practice for Reinforced Concrete Construction".
9. Wire fabric shall conform to ASTM A–185.
10. Dimensions shown for location of reinforcing are to the face of main bars and denote clear coverage. Concrete coverage shall be as follows:
    Concrete cast directly against ground (except slabs)——3"
    Concrete exposed to ground but placed in forms——2"
    Tied Columns (main bars)——1½"
    Beams (top bars)——1–1/2"
    Beams (all other main reinforcing)——2"
    Walls (exterior face)——1–1/2"
    Walls (interior face)——3/4"
    Slabs (on ground)——2" clear from top uno
11. Splices in continuous reinforcement shall be lapped uno. In no case shall splices be less than 40 bar diameters. Splices in adjacent bars shall be not less than 5'–0" apart. Splice continuous bars in soil–bearing grade beams as follows: bottom bars at centerline of support. All bars size #14 and larger shall be continuous for the full length shown. Splices in WWF shall be 1–1/2 meshes wide.
12. All hooks shall be standard hooks unless otherwise shown or noted.
13. Construction joints shall be made rough and all laitance removed from the surface. Concrete may be roughened by chipping the entire surface, sand blasting, or raking the surface to provide 1/4" deep deformations.
14. Remove all debris from forms before casting any concrete.
15. Reinforcing, dowels, bolts, anchors, sleeves, etc. to be embedded in concrete shall be securely positioned before placing concrete.
16. Walls shall be cast in horizontal layers of 2'–0" maximum depth.
17. Concrete in walls, piers or columns shall set at least 3 hours before placing concrete in beams, spandrels, or slabs supported thereon.
18. Horizontal wall bars in double layer walls shall be staggered.
19. Dowel all vertical reinforcing in walls and columns from foundation with same size bar.
20. Consolidate concrete placed in forms by mechanical vibrating equipment supplemented by hand–spading, rodding or tamping. Use equipment and procedures for consolidation of concrete in accordance with the recommended practices of ACI 309 to suit the type of concrete and project conditions. Concrete shall not be dropped through reinforcing steel (as in walls) so as to cause segregation of aggregates. In such cases hoppers and chutes or trunks of variable lengths shall be used so that the free unconfined fall of concrete shall not exceed 6 feet.
21. Drill through steel columns, beams and plates to pass continuous reinforcing.
22. No wood spreaders allowed. No wood stakes shall be embedded in concrete.
23. Additional reinforcing in precast or tilt–up panels required for lifting stresses shall be supplied by Contractor.
24. Provide 2 – #5 x 4'–0" diagonal reinforcing at mid–depth of slab at all re–entrant corners typical.
25. All saw cutting shall be done after initial set has occurred to avoid tearing or damage by the saw blade, but before initial shrinkage has occurred.
26. CONCRETE STRENGTHS:

Item	f'c at 28 days	Max Aggregate Size	Weight	Max w/c Ratio
A. Footings & grade beams & piers	4000	1 1/2"	NW	0.50 7 sack min
B. Slab on grade/walls	4000	1"	NW	0.50 7 sack min
C. Lean mix conc fill	1500	1 1/2"	NW	3.5 sack min
D. Columns	4000	3/4"	NW	0.50 7 sack min

STRUCTURAL STEEL

5105N01-1

1. Fabrication, erection and materials shall conform with the AISC Specification for the Design, Fabrication and Erection of Structural Steel for Buildings and the Uniform Building Code, latest editions.
2. Structural Steel rolled shapes and plates shall conform with ASTM A–36 or A–572, grade 50 as noted.
3. Steel Tube shall conform to ASTM A–53, Types E or S, Grade B.
4. Structural Tubing shall conform to ASTM A–500, Grade B.
5. All structural steel shall receive minimum of one shop coat of red primer paint. Do not paint areas to be field welded, to receive friction type high strength bolts, or to be embedded in concrete. Provide additional painting as noted in the specifications.
6. All structural steel shall be erected plumb and true to line. Temporary bracing shall be installed and left in place until other means are provided to adequately brace the structure.
7. Place non–shrink grout under all base plates before adding vertical load.
8. Wrap structural steel embedded in concrete with 6"x6"/#1.4 x #1.4 WWF.
   Structural steel below grade shall have 3 inches minimum of concrete cover.
9. Bolted connections shall consist of unfinished bolts conforming to ASTM A–307 unless noted otherwise. Where high strength bolts are indicated, bolts conforming to ASTM A–325 or ASTM A–490 shall be provided.
10. "Slip–critical" bolted connections:
    a) "Slip–critical" connections (A325SC design values with special inspection) are required at all braced frame connections, at all connections along chord lines and drag lines (as noted on plans), and at all bolts in oversized or slotted holes.
    b) The special inspector must be present during installation and tightening operation of "slip–critical" connections.
11. Provide 1/2" diameter stitch bolts and ring fills, spaced at not more than 2'–0" on center for all double angle members.
12. At wood to steel parallel contact, bolt with 1/2" diameter bolts at maximum 24"cc.
13. Holes for unfinished bolts shall be of the same nominal diameter of the bolt plus 1/16". Use standard AISC gage and pitch for bolts except as noted otherwise.
14. Holes for anchor bolts embedded in concrete shall be of the same nominal bolt diameter plus 3/16" unless noted otherwise.
15. Welding shall be done by the electric arc process in accordance with American Welding Society Standards, using only certified welders. All groove welds shall have complete penetration unless noted otherwise. All exposed welds shall be ground smooth.
16. Weld lengths called for on plans are the net effective lengths required.
17. Minimum fillet welds: 3/16" @ t < 1/2"
    1/4" @ ½ < t < 3/4"
    5/16" @ t > 3/4"
18. Welding Procedure Specifications (WPS) for shop and field prequalified weld joints and weld joints qualified by test shall be prepared for review prior to fabrication. All welding procedure items such as base metals, welding processes, filler metals and joint details that meet the requirements of AWS D1.1 Section 5.1 shall be considered as prequalified. Any change or substitution that is beyond the range or tolerance or requirements for prequalification shall be qualified by test per AWS D1.1 Section 5 part B. Welds at base metals over 2 inches in thickness are not allowed as prequalified joint welds.
19. For nondestructive testing of welded connections excluding primary members of moment resisting frames:
    a) Welded connections shall be tested by nondestructive methods for compliance with UBC Section 2249 J2 or 2251 J2, and job specifications. Ultrasonic Testing shall be in accordance with AWS D1.1 ASTM E164 and ASME Section V. Radiography shall be in accordance twith AWS D1.1, ASTM E94 and E99, and ASME Section V. This testing shall be part of the special inspection requirements of UBC Section 1701 performed by an approved independent testing laboratory as follows:
       1. Base metal thicker than 1 inch when subject to through thickness weld shrinkage strains.
       2. All complete penetration groove or butt welds.
       3. All partial penetration groove welds when used in column splices.
    b) Any material discontinuities shall be accepted or rejected on the basis of defect rating in accordance with the (larger reflector) criteria of UBC Section 2249 J2 or 2251 J2.

METAL DECK NOTES

5305N01-1

1. Provide metal decking of type and gauge as shown on plans.
2. Metal floor deck shall be composite type, conforming to ASTM A653, structural quality, with minimum yield strength of 38 ksi and shall be zinc coated per ASTM A625, C–60 grade coating.
3. Metal roof deck shall conform to ASTM A653, structural quality, with minimum yield strength of 38 ksi and shall be galvanized per ASTM A625, Grade 60 coating.
4. Prior to fabrication, the Contractor shall submit shop drawings for the metal decking, showing deck gauge, size and layout as well as closure conditions, welds to supports and side lap details.
5. Connection and welding of decking to structural supports and deck side seams shall be as specified in the structural drawings.
6. The General Contractor shall coordinate the load requirements from all subcontractors so that no combination of loads exceeds the limitations given in design criteria.
7. All reinforced openings in metal deck shall be installed by metal deck subcontractor.
8. At metal decks to receive concrete, absolutely no conduit or piping of any type is to be placed horizontally within the depth of the concrete above the metal deck.
9. At metal decks without concrete, hang no more than 50 lbs. at 1–1/2" deck (20 gauge min.) and 100 lbs. at 3" deck (20 gauge min.) per metal deck rib in any span; space hangers no closer than 2'–0"cc perpendicular to span.
10. Where suspended ceiling or hanger wires are required by others, verify and coordinate locations, patterns, spacings, etc. with the appropriate trade. Drill or punch holes at bottom of deck flutes of sufficient size to pass support wires. Wire supports shall be looped and secured with a minimum of three (3) tight turns around a minimum 1–1/2" x 8" long furring channel or No. 3 x 8" long reinforcing bar centered above the hole and laid in the deck flutes.

COLD FORMED METAL FRAMING

5405N01-1

1. Galvanized sheet steel shall conform to ASTM A653, structural quality, with a minimum yield strength of 33 ksi for 18 ga and lighter and ASTM A653, structural quality, with a minimum yield strength of 50 ksi for 16 ga and heavier. Hot–rolled carbon sheet and strip steel used in the fabrication of cold–formed members shall conform to ASTM A570 with a rust inhibitive coating.
2. Metal studs and joists shall be of size and gauge shown on drawings with the minimum effective section properties shown in the table(s).
3. Minimum thickness shown in table for the gauge specified represents 95% of design thickness per 1986 AISI Code, Section A3.4.
4. Metal framing shall be per ICBO ES No. 4943P. Contractor shall be responsible for obtaining agency approval for any substitutions.
5. Welding shall be in accordance with AWS D1.3 "Structural Welding Code–Sheet Steel". Welders shall be AWS certified. Welding Rods: E60XX series. All field welding shall have special inspection.
6. Metal tracks shall be same gauge as studs which it supports, unpunched, with minimum flange width of 1 1/4 inches, except where slotted slip tracks are required. See Typical Detail sheets for details.
7. Metal studs shall not have punch–outs closer than 1 1/2 times the depth of the stud from the end of the stud or at intermediate lateral bearing points of studs.

POWDER ACTUATED FASTENERS (SHOT PINS)

1002N18-1

1. These notes govern all conditions called out on the plans as 'shot pins' unless specifically noted otherwise.
2. All shot pins shall be as manufactured by Hilti Incorporated. Reference shall be made to the 1992 "Product Technical Guide" for additional information.
3. Shot pins driven into steel base material shall be X–DNI type with P8 washers. Length of pin shall be as required to penetrate through the steel base material. Minimum edge distance to any connected part shall be 1/2" and minimum fastener spacing shall be 2".
4. Shot pins driven into concrete base material shall be X–DNI type with P8 washers. Length of pin shall be as required to penetrate 1" into the concrete through the low flute. Pin shall be centered in the flute and minimum fastener spacing shall be 4".
5. Shot pins driven into concrete base material through metal deck shall be X–DNI or X–2F type with P8 washers. Length of pin shall be as required to penetrate 1" into the concrete through the low flute. Pin shall be centered in the flute and minimum fastener spacing shall be 4".
6. Where steel washers are indicated on the drawings, pins shall be X–DNI or X–2F pins with premounted steel washers with a minimum diameter of 15 mm.

HOLLOW CONCRETE UNIT MASONRY (BLOCK)

4202N01-1

1. Concrete block units shall conform to ASTM C–90 Type I units. Compressive strength of units to be 1000 psi for gross area and 2000 psi for net area. F'm = 1500 psi. F'm shall be verified in accordance with section 2105.3 of the 1994 UBC. Block units shall be fabricated with a "Coffrans Core" (1 1/2" face shells).
2. Mortar shall be proportioned to attain a 28 day compressive strength of 1800 psi. Use a minimum of 1 part Portland cement to 1/4 – 1/2 part hydrated lime with sand at 2–1/2 to 3 times combined volume of cement and lime. 2" cubes shall test 1800 psi in 28 days. When required, mortar strength shall be verified in accordance with section 2105.4 of the 1994 UBC.
3. Grout shall be proportioned to attain a 28 day compressive strength of 2000 psi. Use a minimum of 1 part Portland cement to 3 parts sand. Add 1 lb. of Sika Grout Aide Type II, or equal, per 100 lb. of cementitious material. 1 to 2 parts of pea gravel shall be used where the least clear cell dimension exceeds 2 inches. Not more than 5% of the pea gravel shall pass the No. 8 sieve and 100% shall pass the 3/8" sieve. When required, grout strength shall be verified in accordance with section 2105.5 of the 1994 UBC.
4. Reinforcing steel shall conform to ASTM A–615 Grade 60 for #4 and larger, Grade 40 for #3 and smaller.
5. Minimum rebar clearance to face shell is one bar diameter or 1/2", whichever is greater.
6. Before block is placed on concrete, thoroughly clean concrete of all laitance and all loose material. Roughen as in a concrete construction joint.
7. Concrete block masonry shall be built to preserve the unobstructed vertical continuity of the cells. All heads and end joints shall be solidly filled with mortar for a distance in from the face of the wall or unit not less than the thickness of the longitudinal face shells. Bond shall be provided by lapping successive courses or by equivalent mechanical anchorage.
8. Vertical cells shall have vertical alignment sufficient to maintain a clear unobstructed continuous vertical cell.
9. Low–lift grouted construction shall conform to 1994 UBC Section 2104.6.1.1.2. High–lift grouted construction shall conform to 1994 UBC Section 2104.6.1.1.3.
10. Clean out openings shall be provided at the bottoms of all cells to be filled at each lift or pour of grout where such lift or pour of grout is in excess of 4'–0" in height. Any overhanging mortar or other obstruction or debris shall be removed from inside of such cells. The clean outs shall be sealed after inspection and before grouting. Mechanically vibrate all grout pours.
11. Vertical reinforcing shall be held in position at top and bottom and at intervals not to exceed 192 bar diameters.
12. Thoroughly clean all cells and bond beams of mortar before grouting.
13. All cells shall be filled solidly with grout. All grouting shall be done under the continuous observation of a qualified inspector when indicated.
14. When grouting is stopped for one hour or longer, horizontal construction joints shall be formed by stopping the pour of grout 1–1/2" below the top of the uppermost unit.
15. Every vertical bar in walls shall lap 48 diameters with a dowel of the same size extending from the foundation. Lap late vertical reinforcing at centerline of wall unless shown or noted otherwise. Carry each dowel to within 3" of the bottom of the foundation and terminate with 90 degree hook. Dowels shall be straight and plumb.
16. Place all horizontal bars in bond beam units. When 2 bars are used, stagger laps minimum of 3'–0".
17. Provide 2 – #5 bars with matching footing dowels (full height of wall at jambs and extending a minimum of 2'–0" past edges of openings at head and sill) each side of all openings and each end of all walls, unless noted otherwise on drawings.
18. All embedded items (bolts, straps, etc.) shall be secured in place prior to grouting. Cut a hole in the face shell to attain a minimum of 1" grout all around embedded items.
19. All bolts in masonry shall be ASTM A307 headed bolts.
20. Use open end block for all stack bond construction.
21. All rebar shall be lap spliced as follows (u n o):

Bar Type	Lap Length	Notes
Vertical bars	48d	Splices for multiple bars in the same cell must be stgrd 24" or lapped 62d
Horizontal bars	48d	
Jamb bars	72d	
Chord bars	72d	Splices for multiple bars in the same cell must be stgrd 24" or lapped 94d
Vertical bars @ ends & corners	72d	

METAL STAIRWAYS

5105N01-1

1. Supplier shall provide complete design drawings and calculations for all metal stairways. Stairways shall be designed for Dead Load + 100 psf Live Load, and Seismic Loads. Supplier shall design, supply, and install all connection materials which shall include but are not necessarily limited to embedded items, bearing plates, stiffeners, diagonal struts, support angles, channels and tubes. All loading conditions resulting in eccentricities or torsion to beams and/or columns shall be resolved by the installation of stiffeners and diagonal struts, designed, supplied and installed by the supplier. Seismic forces shall be accounted for and braced back to the main structure. See Architectural drawings for stairway dimensions and details. Submit Shop Drawings and calculations signed by a Civil Engineer, registered in the state in which the project is located, for review by the Architect and/or Structural Engineer, and approval by the enforcement agency prior to fabrication. See specifications for additional design criteria.

ELEVATOR GUIDE RAILS AND SUPPORTS

1002N13-1

1. Guide rails, guide rail supports and brackets for elevator cab or counterweight shall be designed to resist a horizontal force of not less than 50% of the operating weight (i.e. dead weight of cab or counterweight plus 40% of the rated load) with a deflection of less than 1/4". Guide rails, supporting members and brackets shall be designed to resist horizontal service loads during running, loading and unloading with a deflection of less than 1/4" for guide rails and 1/8" for supporting members and brackets. Provide Shop Drawings and engineering calculations for the guide rails, guide rail supports and supporting brackets signed by a Civil Engineer, registered in the state in which the project is located, for review by the Architect and/or Structural Engineer, and for approval by the enforcement agency prior to fabrication. All loading conditions resulting in eccentricities or torsion to beams and/or columns shall be resolved by the installation of stiffeners and diagonal struts designed and installed by the supplier. Seismic forces shall be accounted for and braced back to the structure. For additional requirements see Title 24 part 2 and part 7. See Architectural drawings for opening/pit dimensions, locations and details.

EXPANSION ANCHOR AND ADHESIVE ANCHOR NOTES

3305N20-1

1. Anchors shall be installed in accordance with the recommendations given in the ICBO report.
2. Special Inspection is required for ICBO Allowable Tension values listed in table. Unless noted otherwise anchors have been designed for special inspection.
3. Design load values on anchors are not to exceed 80% of the tension and shear values listed in table.
4. Tension Test Load values are based on 80% of twice the tension values listed.
5. Allowable loads may not be increased for duration of loads such as wind or seismic forces.
6. Each anchor type (loaded in either pullout or shear) shall have 50 percent of the anchors (minimum of three anchors in each group arrangement) tested in tension to the tension test loads shown in the table. If any anchor fails testing, all anchors of the same type not previously tested shall be tested until 20 consecutive anchors pass, then resume the initial testing frequency.
7. When installing drilled in anchors in existing concrete or masonry, use care and caution to avoid cutting or damaging existing reinforcing bars.
8. The testing of the anchors shall be done by the Testing Laboratory and a report of the test results shall be submitted to the governing agency and Architect/ Structural Engineer. Testing shall occur 24 hours minimum after the installation of the anchors.
9. All anchors shall be installed to the maximum depth listed in the table. Use of other embedment depths must be approved by the Structural Engineer. For anchors with embedments not listed, interpolate between the values given.
10. Where the number of anchors of a specific size and type exceed 100, the following testing procedure may be used. The first 40 anchors shall be tested as specified in note 6 above. 10 percent of all additional anchors shall be tested. Any failure shall be handled in the same manner as specified in note 6 above.
11. Anchors installed in metal deck with concrete shall be installed in the center of the low flue of the decking. The decking shall have a minimum thickness of 20 gauge. The minimum depth of embedment above the top of the deck shall be 1 1/2". The effective depth of embedment is considered to be 1/3 of the metal deck height plus the depth of embedment above the top of the deck.

NORMAL WEIGHT CONCRETE ANCHORS 3305N21-1

F'c = 3000 PSI

EXPANSION ANCHORS HILTI KWIK BOLT II			CARBON STEEL ANCHORS ICBO NO. 4627		
ANCHOR DIAMETER	EMBED. DEPTH	INSTALL. TORQUE (FT–LBS)	ICBO ALLOWABLE SHEAR	ICBO ALLOWABLE TENSION	TENSION TEST LOAD
1/4"	2"	7	400	550	880
1/4"	3–3/4"	7	400	625	1000
3/8"	2–1/2"	25	1100	1210	1940
3/8"	4–1/4"	25	1100	1300	2080
1/2"	3–1/2"	45	1840	2000	3200
1/2"	6"	45	1840	2165	3460
5/8"	4"	95	3125	2670	4270
5/8"	7"	95	3125	3250	5200
3/4"	4–3/4"	225	4225	3625	5800
3/4"	8"	225	4225	4625	7400
1"	6"	325	8625	5310	8500
1"	9"	325	8625	7110	11380

LIGHT WEIGHT CONCRETE ANCHORS 3305N22-1

F'c = 3000 PSI

EXPANSION ANCHORS HILTI KWIK BOLT II			CARBON STEEL ANCHORS ICBO NO. 4627		
ANCHOR DIAMETER	EMBED. DEPTH	INSTALL. TORQUE (FT–LBS)	ICBO ALLOWABLE SHEAR	ICBO ALLOWABLE TENSION	TENSION TEST LOAD
1/4"	2"	5	400	375	600
3/8"	2–1/2"	15	1100	805	1290
1/2"	3–1/2"	30	1840	1300	2080
5/8"	4"	75	3125	1975	3160
3/4"	4–3/4"	150	4135	2725	4360

NORMAL WEIGHT CONCRETE ANCHORS 3305N27-1

F'c = 3000 PSI

ADHESIVE ANCHORS HILTI HIT HY–150				ASTM A36 OR A193 GR B STEEL THREADED ROD ICBO NO. 5193	
ANCHOR DIAMETER	BIT DIAMETER	EMBED. DEPTH	ICBO ALLOWABLE SHEAR	ICBO ALLOWABLE TENSION	TENSION TEST LOAD
3/8"	7/16"	3–1/2"	1110	1560	2500
3/8"	7/16"	5–1/4"	1110	2010	3220
1/2"	9/16"	4–1/4"	2160	2610	4180
1/2"	9/16"	6–5/8"	2160	3700	5920
5/8"	11/16"	5"	3050	3410	5460
5/8"	11/16"	7–1/2"	3050	5010	8020
3/4"	13/16"	6–5/8"	4410	5220	8350
3/4"	13/16"	10"	4410	7620	12190
7/8"	15/16"	7–1/2"	7110	6010	9620
7/8"	15/16"	11–1/4"	7110	10540	16860
1"	1–1/16"	8–1/2"	8090	6870	10990
1"	1–1/16"	12–3/8"	8090	12330	19730

NORMAL WEIGHT CONCRETE ANCHORS 3305N28-1

F'c = 3000 PSI

ADHESIVE ANCHORS HILTI HIT HY–150				ASTM A615 OR A706 GR 60 REBAR ICBO NO. 5193	
ANCHOR DIAMETER	BIT DIAMETER	EMBED. DEPTH		ICBO ALLOWABLE TENSION	TENSION TEST LOAD
#3	1/2"	3–1/2"		1410	2260
#3	1/2"	7"		2900	4640
#4	5/8"	4–1/4"		1875	3000
#4	5/8"	6–5/8"		2945	4710
#5	3/4"	5"		2625	4200
#5	3/4"	7–1/2"		4125	6600
#6	7/8"	6–5/8"		3190	5100
#6	7/8"	10"		4875	7800
#7	1"	6–5/8"		5000	8000
#7	1"	11"		10275	16440
#8	1–1/8"	8–1/4"		6565	10500
#8	1–1/8"	12"		9635	15420
#9	1–5/16"	10"		8440	13500
#9	1–5/16"	12"		12750	20400
#10	1–3/8"	12"		11250	18000
#10	1–3/8"	18"		16875	27000

ENGLISH HARPER RETA
ARCHITECTS

580 UNIVERSITY AVENUE SUITE 100
SACRAMENTO, CA 95825 (916) 568–1821

THIS DRAWING IS NOT FINAL OR TO BE USED FOR CONSTRUCTION UNTIL IT IS SIGNED BY THE ARCHITECT AND THE OWNER.

ARCHITECT
EDWARD L. ENGLISH C–10399
RICHARD L. HARPER C–13830
RONALD A. RETA C– 9879

OWNER

CONTRACTOR

REGISTERED ARCHITECT RONALD A. RETA No. 3-31- STATE OF CALIFORNIA

Turner Construction Company

BUEHLER & BUEHLER ASSOCIATES
STRUCTURAL ENGINEERS, INC.
7300 Folsom Blvd., Suite 103
Sacramento, Ca. 95826
(916) 381-8181

REGISTERED PROFESSIONAL ENGINEER LAWRENCE C. JONES No. SE 3138 Exp. 12/31/01 STRUCTURAL STATE OF CALIFORNIA

USE ONLY COPY

This set of plans and specifications MUST be kept on the job site at all times and it is unlawful to make any changes or alterations on the same, or any part thereof, without the permission of the Architect. Any violation of this section may subject the violator to a penalty as provided by the Business and Professions Code of the State of California.

The drawings and specifications are the property of the Architect and are not to be used in any way prejudicial to his interests. Ownership of the drawings and specifications may not be transferred without written consent of the Architect and payment in full for all professional services rendered, and may be withheld until after final approval.

KEY PLAN

DATE	NO.	DESCRIPTION
1/13/00	3	Overall Permit Set
11/15/99	2	Progress Set
10/18/99	1	Progress Set

REVISIONS

DRAWN BY
MAR

CHECKED BY
LEJ

Essential Services Facility (UNDER SEPARATE DOCUMENT PACKAGE)

Parking Garage

Parking Garage
City of Stockton, California
FOUNDATION RE–DESIGN SET

DRAWING

GENERAL NOTES
–
–

PROJECT NO. 98113

DRAWING NO. **S1.01G**

CADFILE S1_01.dwg

DATE 07 SEPTEMBER 1999

Structural Sheet Index

S1.01G	General Notes
S1.02G	Typical Details
S1.03G	Typical Details
S2.01G	Foundation & Ground Level Slab Plan (West)
S2.02G	Foundation & Ground Level Slab Plan (East)
S2.03G	2nd Floor Framing Plan (West)
S2.04G	2nd Floor Framing Plan (East)
S2.05G	3rd thru 6th Floor Framing Plan (West)
S2.06G	3rd thru 6th Floor Framing Plan (East)
S2.07G	7th Floor Framing Plan (West)
S2.08G	7th Floor Framing Plan (East)
S2.09G	8th Floor Framing Plan (West)
S2.10G	8th Floor Framing Plan (East)
S3.01G	Pile Details and Pilecaps
S3.02G

TYPICAL DETAILS

APPLICABLE TO ALL DRAWINGS UNLESS NOTED OR SHOWN OTHERWISE

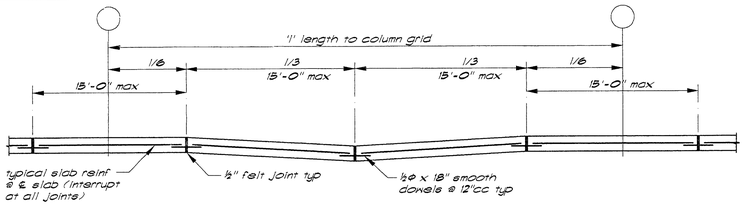

Note:
Construction joints and control joints shall divide slab into areas not exceeding 225 sq ft without reentrant corners and with length to width ratios not exceeding 1½ to 1. Contractor shall submit layout plan showing proposed control and construction joint locations. Joint spacing shall not exceed 15 feet in either direction.

Slab Articulation Joint Detail — 1/S1.02

3305001-12

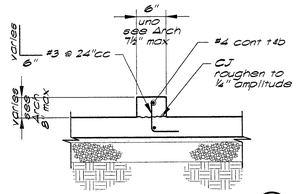

Typical Curb — 2/S1.02

3305007-12

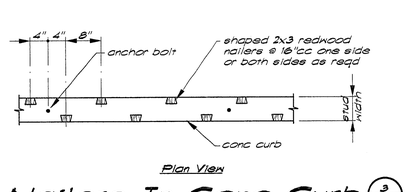

Nailers In Conc Curb — 3/S1.02

3305006-12

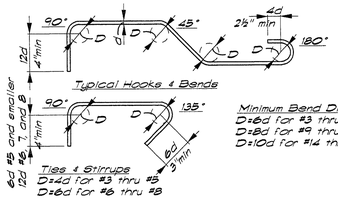

Minimum Bend Diameter
D=6d for #3 thru #8
D=8d for #9 thru #11
D=10d for #14 thru #18

Note: All hooks shall be 90° standard hooks unless otherwise shown or noted.

Standard Rebar Hooks and Bends — 7/S1.02

3305003-12

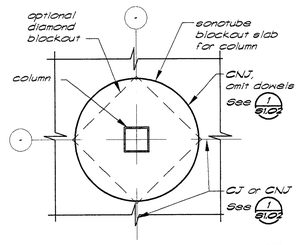

Slab Blockout — 8/S1.02

3305004-12

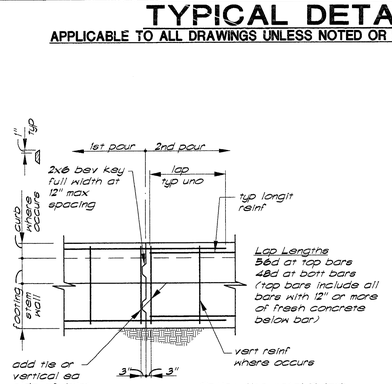

Option: Use metal K-lath in lieu of keys for full depth of foundation at unexposed foundations only.

Typical Foundation Construction Joint — 4/S1.02

3305016-24

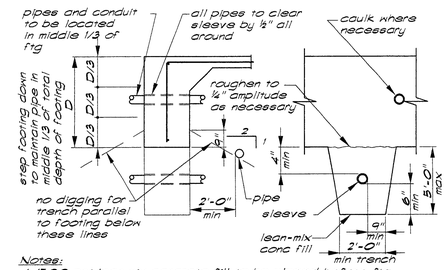

Notes:
1. 1500 psi lean mix concrete fill to be placed before ftg is cast. Make same width as ftg and full width of pipe trench.
2. Step ftg if pipe occurs in lower third of original footing depth.
3. No pipes shall be placed below spread ftgs or within 2 to 1 bearing zone around spread footing.
4. If pipe is in place prior to casting concrete, wrap pipe w/ 1" styro-foam insulation in lieu of sleeve.
5. Pipes or conduits are not allowed parallel in footing.

Concrete Footings at Pipes & Conduits — 5/S1.02

3305005-32

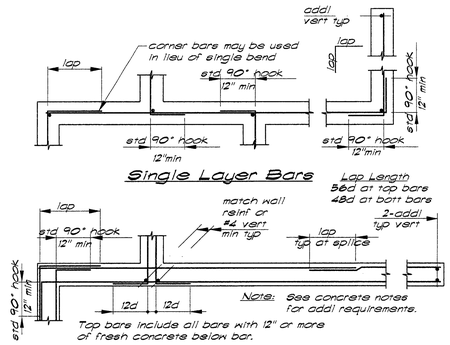

Corner Reinforcing at Concrete Walls & Ftgs — 6/S1.02

3305008-32

Note: vertical not shown for clarity. Provide verticals as noted on drawings

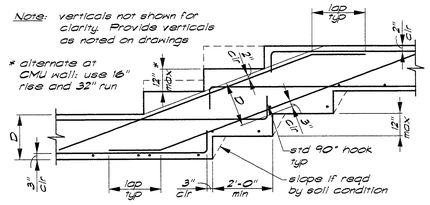

Indicated on Foundation Plan by:

Lap Length
Tbd at top bars, 48d at bott bars
(top bars include all bars with 12" or more of fresh concrete below bar)

Typical Footing Step — 9/S1.02

3305010-32

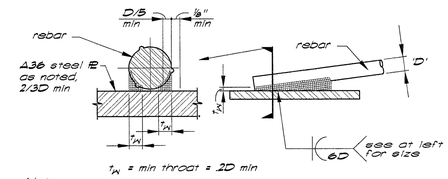

t_W = min throat = .2D min

Notes:
1. Rebar shall be ASTM A706 or ASTM A615 with carbon equivalent no greater than .75% and conforming to UBC Standard 19-2.
2. All preheating and welding shall be done in accordance with AWS D1.4.
3. All welding shall be continuously inspected by a qualified laboratory.

Rebar Welding Detail — 10/S1.02

3305002-32

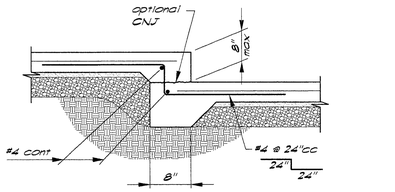

Typical Step in Slab — 11/S1.02

3305018-12

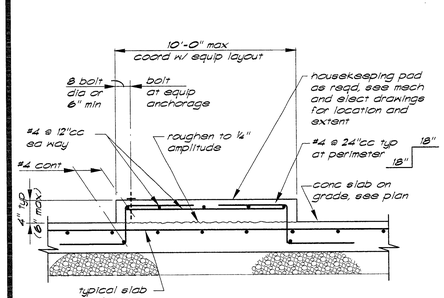

Typical Housekeeping Pad at Slab on Grade — 12/S1.02

3305017-16

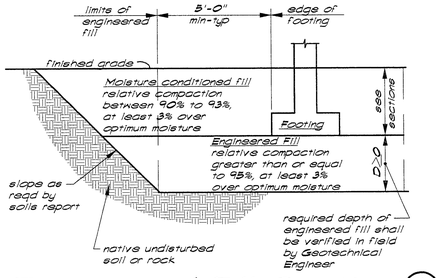

Engineered Fill Section — 13/S1.02

3305013-32

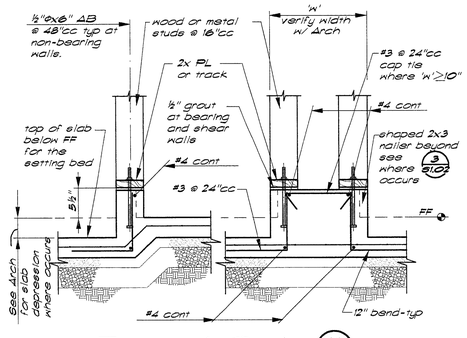

Typical Curb — 14/S1.02

At slab depression and double wall

3305012-12

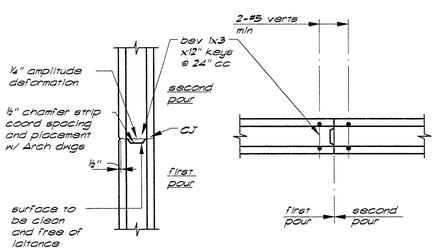

Horizontal Construction Joint — (8'-0" max lifts)

Vertical Construction Joint — (15 x height or 60'-0" max spacing)

Concrete Wall Joints — 15/S1.02

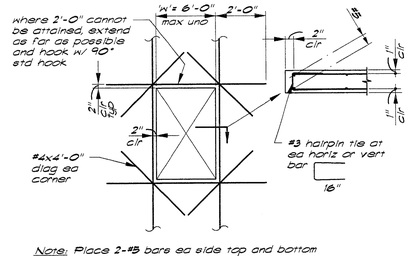

Note: Place 2-#5 bars ea side top and bottom of all openings. Provide 2-#5 bars full height verticals each side of opening with matching footing dowels.

Opening Reinforcing In Concrete Walls — 16/S1.02

3305014-32

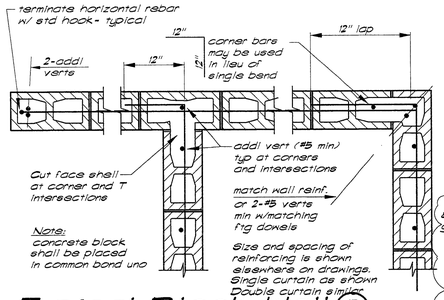

Typical Block Wall Reinforcing at Corners and Intersections — 17/S1.02

4205002-12

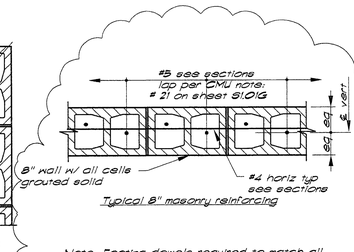

Note: Footing dowels required to match all vertical reinforcing.

Typical Block Wall Reinforcing — 18/S1.02

4205003-12 △3

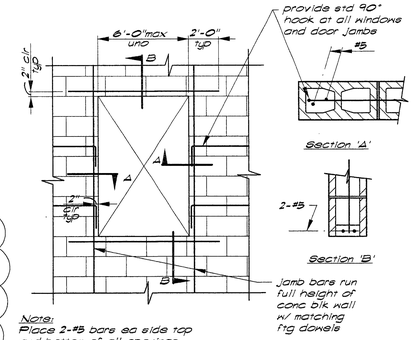

Note: Place 2-#5 bars ea side top and bottom of all openings. Top & bottom bars shall not be spliced.

Opening Reinforcing at CMU Wall Openings — 19/S1.02

4205001-12

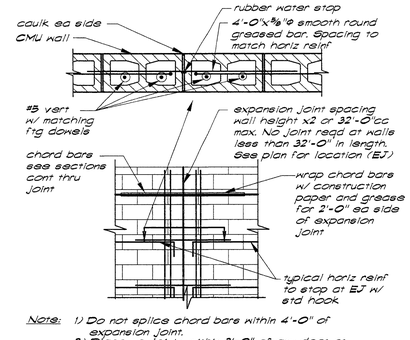

Note: 1) Do not splice chord bars within 4'-0" of expansion joint.
2) Place no joints within 2'-0" of any door or window openings.

Typical Block Wall Expansion Joint — 20/S1.02

4205004-12

PLANS REVIEWED BY
Precision Inspection Company
Inspection and Consulting Services
Page 24 of 44

ENGLISH HARPER RETA
ARCHITECTS

580 UNIVERSITY AVENUE SUITE 100
SACRAMENTO, CA 95825 (916) 568-1821

THIS DRAWING IS NOT FINAL OR TO BE USED FOR CONSTRUCTION UNTIL IT IS SIGNED BY THE ARCHITECT AND THE OWNER.

ARCHITECT
EDWARD P. ENGLISH C-10399
RICHARD L. HARPER C-13830
RONALD A. RETA C- 9879

OWNER

CONTRACTOR

REGISTERED ARCHITECT RICHARD L. HARPER EXP. 3-31-01 STATE OF CALIFORNIA

Turner Construction Company

BUEHLER & BUEHLER ASSOCIATES
STRUCTURAL ENGINEERS, INC.
7300 Folsom Blvd., Suite 103
Sacramento, Ca. 95826
(916) 381-8181

REGISTERED PROFESSIONAL ENGINEER LAWRENCE E. JONES No. SE 3138 Exp. 12/31/01 STRUCTURAL STATE OF CALIFORNIA

Essential Services Facility (UNDER SEPARATE DOCUMENT PACKAGE)

Parking Garage

KEY PLAN

This set of plans and specifications MUST be held to perform the work described hereon in accordance with the provisions of any Ordinance or Law. Copying of structure not permitted until after final approval.

JOB SITE COPY

DATE	NO.	DESCRIPTION
1/13/00	3	Overall Permit Set
11/15/99	2	Progress Set
10/18/99	1	Progress Set

REVISIONS
DRAWN BY MAR
CHECKED BY LEJ

Parking Garage
City of Stockton, California
FOUNDATION RE-DESIGN SET

DRAWING
TYPICAL DETAILS
–
–

PROJECT NO. 98113
DRAWING NO. S1.02G
CADFILE S1_02.dwg
DATE 07 SEPTEMBER 1999

I:\1998\8200\Concept\S1_02.dwg 01/11/00 16:35 bill Mark A. R

TYPICAL DETAILS

APPLICABLE TO ALL DRAWINGS UNLESS NOTED OR SHOWN OTHERWISE

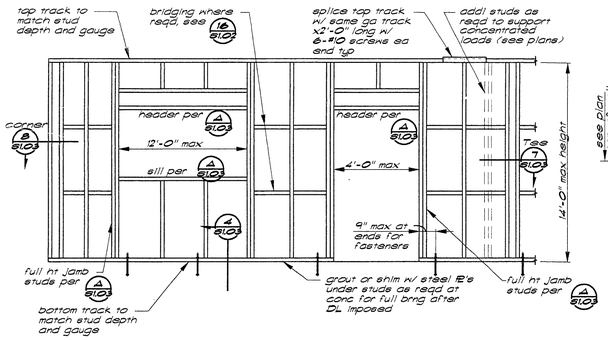

Note: 1. All studs and tracks shall be 6"x18ga unc.

Typical Metal Stud Wall Elevation 1/S1.03

5405100-12

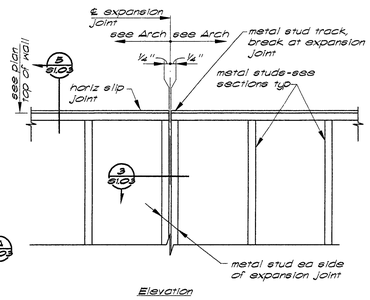

Elevation

Metal Stud Expansion Joints 2/S1.03

5405025-12

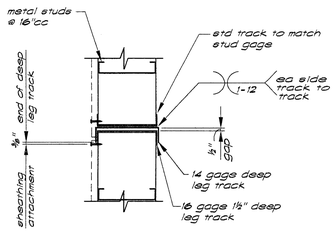

Expansion Joint Detail 3/S1.03

5405026-12

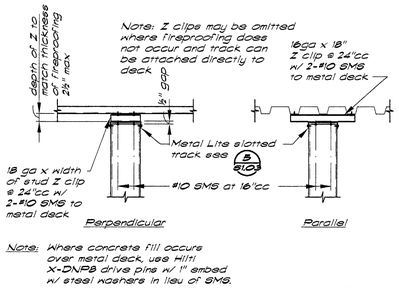

Note: Where concrete fill occure over metal deck, use Hilti X-DNPB drive pins w/ 1" embed w/ steel washers in lieu of SMS.

Slip Track to Metal Deck w/ Fireproofing 4/S1.03

5405217-12

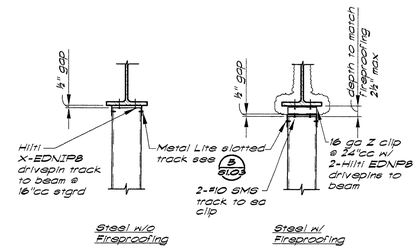

Slip Track to Steel Beam 4A/S1.03

5405218-12

5405101-1

Wall Opening Framing Schedule 4/S1.03

'W' Width max	Jambs	Header	Sill
4'-0"	dbl stud 6/S1.03	track & stud 9/S1.03	track 12/S1.03
8'-0"	dbl stud 6/S1.03	2 tracks & stud 10/S1.03	track & stud 13/S1.03
12'-0"	triple stud 6/S1.03	3 tracks & 2 studs 11/S1.03	2 tracks & stud 14/S1.03

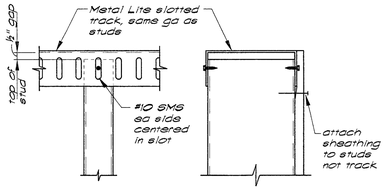

Note: See 4/S0.3 and 4A/S0.3 for attachment of track to structure.

Detail 5/S1.03

5405215-4

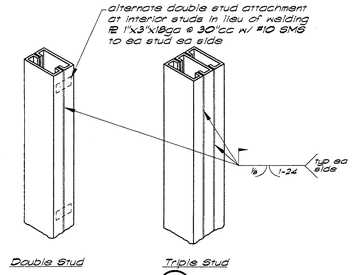

Detail 6/S1.03

5405007-12

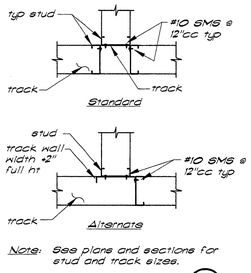

Note: See plans and sections for stud and track sizes.

Typical Tee Intersection 7/S1.03

5405004-12

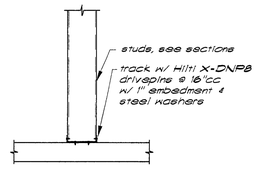

Typical Sill Track to Concrete 8/S1.03

5405211-12

Wall Stud Schedule

Height	Stud
0 to 10'-1"	4" x 20 ga @ 16"cc
10'-2" to 11'-1"	4" x 18 ga @ 16"cc
11'-2" to 14'-0"	6" x 18 ga @ 16"cc

Note: all studs are IC type with 1¼" flanges

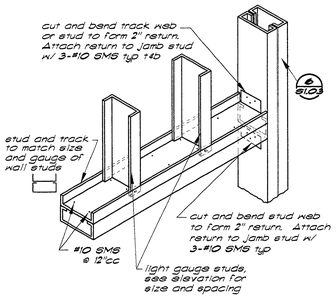

Header Detail 9/S1.03

5405013-12

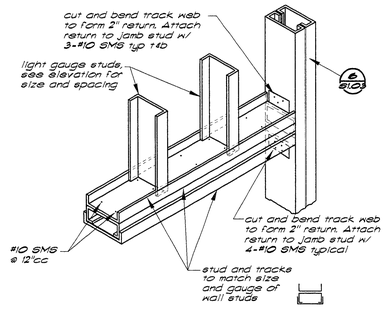

Header Detail 10/S1.03

5405014-12

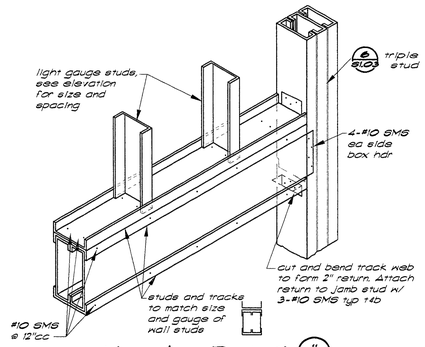

Header Detail 11/S1.03

5405312-12

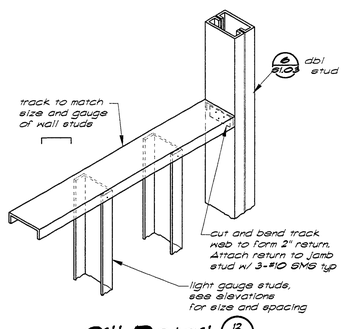

Sill Detail 12/S1.03

5405016-12

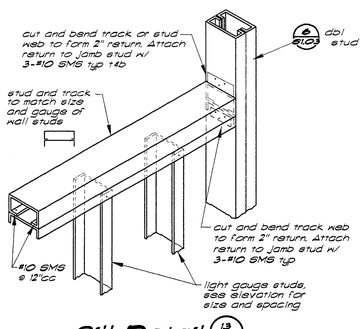

Sill Detail 13/S1.03

5405009-12

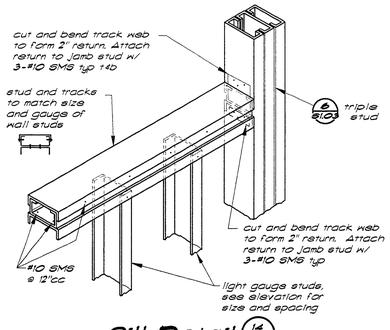

Sill Detail 14/S1.03

5405010-12

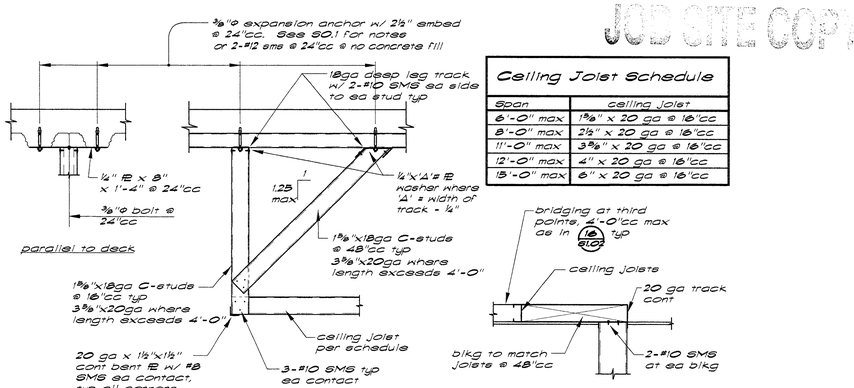

Ceiling Joist Schedule

Span	Ceiling Joist
6'-0" max	1⅝" x 20 ga @ 16"cc
8'-0" max	2½" x 20 ga @ 16"cc
11'-0" max	3⅝" x 20 ga @ 16"cc
12'-0" max	4" x 20 ga @ 16"cc
15'-0" max	6" x 20 ga @ 16"cc

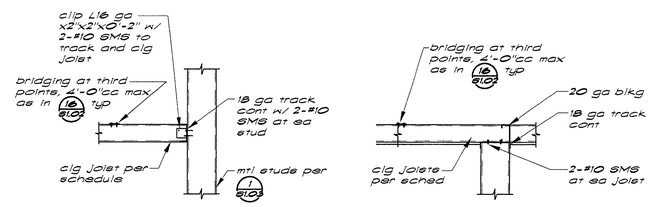

Interior Framed Ceiling Details 15/S1.03

5405250-12

PLANS REVIEWED BY
Precision Inspection Company
Inspection and Consulting Services
Page 25 of 119

JOB SITE COPY

ENGLISH HARPER RETA
ARCHITECTS

580 UNIVERSITY AVENUE SUITE 100
SACRAMENTO, CA 95825 (916) 568-1821

THIS DRAWING IS NOT FINAL OR TO BE USED FOR CONSTRUCTION UNTIL IT IS SIGNED BY THE ARCHITECT AND THE OWNER.

ARCHITECT
EDWARD P. ENGLISH C-10399
RICHARD L. HARPER C-13830
RONALD A. RETA C- 9879

OWNER

CONTRACTOR

LICENSED ARCHITECT RONALD A. RETA REN. 3-31- STATE OF CALIFORNIA

Turner Construction Company

BUEHLER & BUEHLER ASSOCIATES
STRUCTURAL ENGINEERS, INC.
7300 Folsom Blvd., Suite 103
Sacramento, Ca. 95826
(916) 381-8181

REGISTERED PROFESSIONAL ENGINEER LAWRENCE E. JONES No. SE 3138 Exp. 12/31/01 STRUCTURAL STATE OF CALIFORNIA

This set of plans and specifications MUST be kept on the job site at all times for review by building officials and it is unlawful for any person to make any changes or deviations from the plans and specifications without the written approval of the building official, architect or engineer.

Date: ____ By: ____

The granting of a permit or approval of plans, specifications and computations shall not be held to permit or to be a construction in violation of any ordinance or law. Occupancy or use shall not be permitted until after final approval.

Essential Services Facility (UNDER SEPARATE DOCUMENT PACKAGE)

Parking Garage

KEY PLAN

DATE	NO.	DESCRIPTION
1/13/00	3	Overall Permit Set
11/15/99	2	Progress Set
10/18/99	1	Progress Set

REVISIONS

DRAWN BY
MAR

CHECKED BY
LEJ

Parking Garage
City of Stockton, California
FOUNDATION RE-DESIGN SET

DRAWING
TYPICAL DETAILS
-
-

PROJECT NO. 98113
DRAWING NO. S1.03G
CADFILE S1_03.DWG
DATE 07 SEPTEMBER 1999

F:\JOBS\98300\Dwgs\S1_03.dwg 01/11/00 16:36:56 Mark A. R.

UNDER SEPARATE DOCUMENT PACKAGE

exterior flatwork

B" CMU wall - see B/S3.04

EJ

6" ℄ grade beam typ unu

3 GGB-6 Only

hatched area denotes 5" conc slab w/ #5@16"oc EW, over 2" sand, 10 mil vapor barrier and 4" gravel

5" conc slab w/ #5 @ 16"oc EW over 6" gravel See 1/S2.01 for slab articulation joints

concrete column typ

concrete shear wall typ

8" CMU wall typ

24"ø CMU pilaster

TS coord by stair mfr

base PL A/S2.02

verify w/ stair mfr.

MATCH LINE

Notes:

1. Site preparation and building pad construction to be done in accordance with Soils Report #5180.001 by Geomatrix Consultants dated 9/1999. Extend engineered fill 5'-0" minimum laterally past the edge of footings. Driven piles shall be approved by Geotechnical Engineer prior to placement of reinforcing steel in pilecaps.
2. (C1) Indicates column type-see schedule 1/S3.02
3. GGB-1 Indicates grade beam size & reinforcing-see schedule 4/S3.02
4. 2 Indicates pilecap schedule - see sheet S3.01
5. +1'-0" Indicates elevation of top of finished slab from reference finished floor +0'-0" = 1180' datum. See Arch'l drawings for ground floor finished slab elevations.
6. -1'-6" Indicates elevation of top of pilecap below reference t.o.pilecap finished floor +0'-0".
7. All concrete wall above ground level shall be delayed 30 days from stressing of level above
8. Verify all dimensions with architectural drawings. Notify Architect of any discrepancies for resolution prior to proceeding. Dimensions are to center of column u.n.o.
9. See architectural drawings for door and window details, and locations, blockouts at door closers, curbs, depressions, pedestal dimensions, slopes and other like items.
10. See architectural drawings for exterior flatwork, planters, curbs, etc.
11. Verify elevator pit dimensions w/ elevator manufacturer prior to construction.
12. Provide 3" minimum concrete cover at base PL's and AB's below grade typ.
13. See metal stair design notes sheet S1.01 and Arch'l for stair dimensions
14. Indicates 8" CMU wall
15. Indicates concrete wall

Foundation and Ground Level Slab Plan (West) — 1/8"=1'-0"

JOB SITE COPY

PLANS REVIEWED BY Precision Inspection Company Inspection and Consulting Services Page 2 of 19

ENGLISH HARPER RETA
ARCHITECTS

580 UNIVERSITY AVENUE SUITE 100
SACRAMENTO, CA 95825 (916) 568-1821

THIS DRAWING IS NOT FINAL OR TO BE USED FOR CONSTRUCTION UNTIL IT IS SIGNED BY THE ARCHITECT AND THE OWNER.

ARCHITECT
EDWARD P. ENGLISH C-10399
RICHARD L. HARPER C-13830
RONALD A. RETA C- 9879

OWNER

CONTRACTOR

LICENSED ARCHITECT RICHARD L. HARPER No. C-13830 REN. 3-31- STATE OF CALIFORNIA

Turner Construction Company

BUEHLER & BUEHLER ASSOCIATES
STRUCTURAL ENGINEERS, INC.
7300 Folsom Blvd., Suite 103
Sacramento, Ca. 95826
(916) 381-8181

REGISTERED PROFESSIONAL ENGINEER LAWRENCE E. JONES No. SE 3138 Exp. 12/31/01 STRUCTURAL STATE OF CALIFORNIA

Essential Services Facility (UNDER SEPARATE DOCUMENT PACKAGE)

Parking Garage

KEY PLAN

DATE	NO.	DESCRIPTION
1/13/00	3	Overall Permit Set
11/15/99	2	Progress Set
10/18/99	1	Progress Set

REVISIONS

DRAWN BY
JBM

CHECKED BY
TDO

5

Parking Garage
City of Stockton, California
FOUNDATION RE-DESIGN SET

DRAWING
Foundation and Ground Level Slan Plan (West)

PROJECT NO. 98113
DRAWING NO. S2.01G
CADFILE –
DATE 24 SEPTEMBER 1999

F:\WKBSDWG\Sample\S2_01.dwg 01/17/00 10:28:36 Mark A. R.

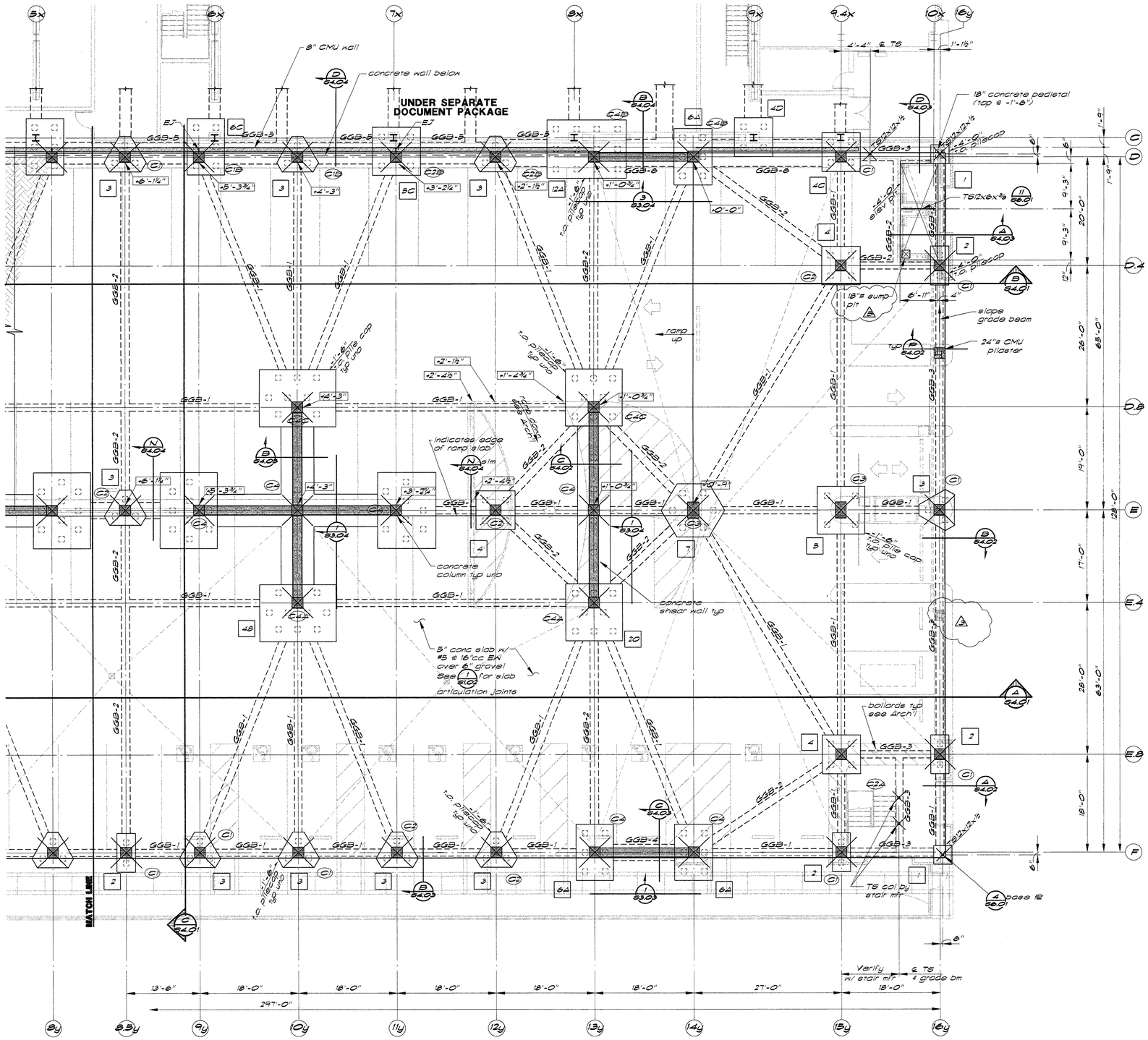

Foundation and Ground Level Slab Plan (East) — 1/8"=1'-0"

ENGLISH HARPER RETA
ARCHITECTS

580 UNIVERSITY AVENUE SUITE 100
SACRAMENTO, CA 95825 (916) 568-1821

THIS DRAWING IS NOT FINAL OR TO BE USED FOR CONSTRUCTION UNTIL IT IS SIGNED BY THE ARCHITECT AND THE OWNER.

ARCHITECT
EDWARD P. ENGLISH C-10399
RICHARD L. HARPER C-13830
RONALD A. RETA C- 9879

OWNER

CONTRACTOR

LICENSED ARCHITECT RONALD A. RETA REN. 3-31- STATE OF CALIFORNIA

Turner Construction Company

BUEHLER & BUEHLER ASSOCIATES
STRUCTURAL ENGINEERS, INC.
7300 Folsom Blvd., Suite 103
Sacramento, Ca. 95826
(916) 381-8181

REGISTERED PROFESSIONAL ENGINEER LAWRENCE E. JONES No. SE 3138 Exp. 12/31/01 STRUCTURAL STATE OF CALIFORNIA

Essential Services Facility (UNDER SEPARATE DOCUMENT PACKAGE)

Parking Garage

KEY PLAN

DATE	NO.	DESCRIPTION
1/13/00	3	Overall Permit Set
11/18/99	2	Progress Set
10/18/99	1	Progress Set

REVISIONS

DRAWN BY
JMB

CHECKED BY
TDO

The reproduction, publication or use of these plans, drawings or specifications or any portion thereof without the written consent of the Architect is prohibited by Law. Any violation of this Law, Civil Code Section 980 to 989 inclusive, Ordinance or Law. Copyright of drawings not permitted until after final approval.

JOB SITE COPY

PLANS REVIEWED BY
Division Inspection Company
Inspection and Consulting Services
Page 20 Of 29

Parking Garage
City of Stockton, California
FOUNDATION RE-DESIGN SET

DRAWING
Foundation and Ground Level Slab Plan (East)

PROJECT NO. 98113
DRAWING NO. S2.02G
CADFILE –
DATE 24 SEPTEMBER 1999

F:\98113\DWG\Design\S2_02.dwg 01/17/00 10:25:56 Mark A. R.

UNDER SEPARATE
DOCUMENT PACKAGE

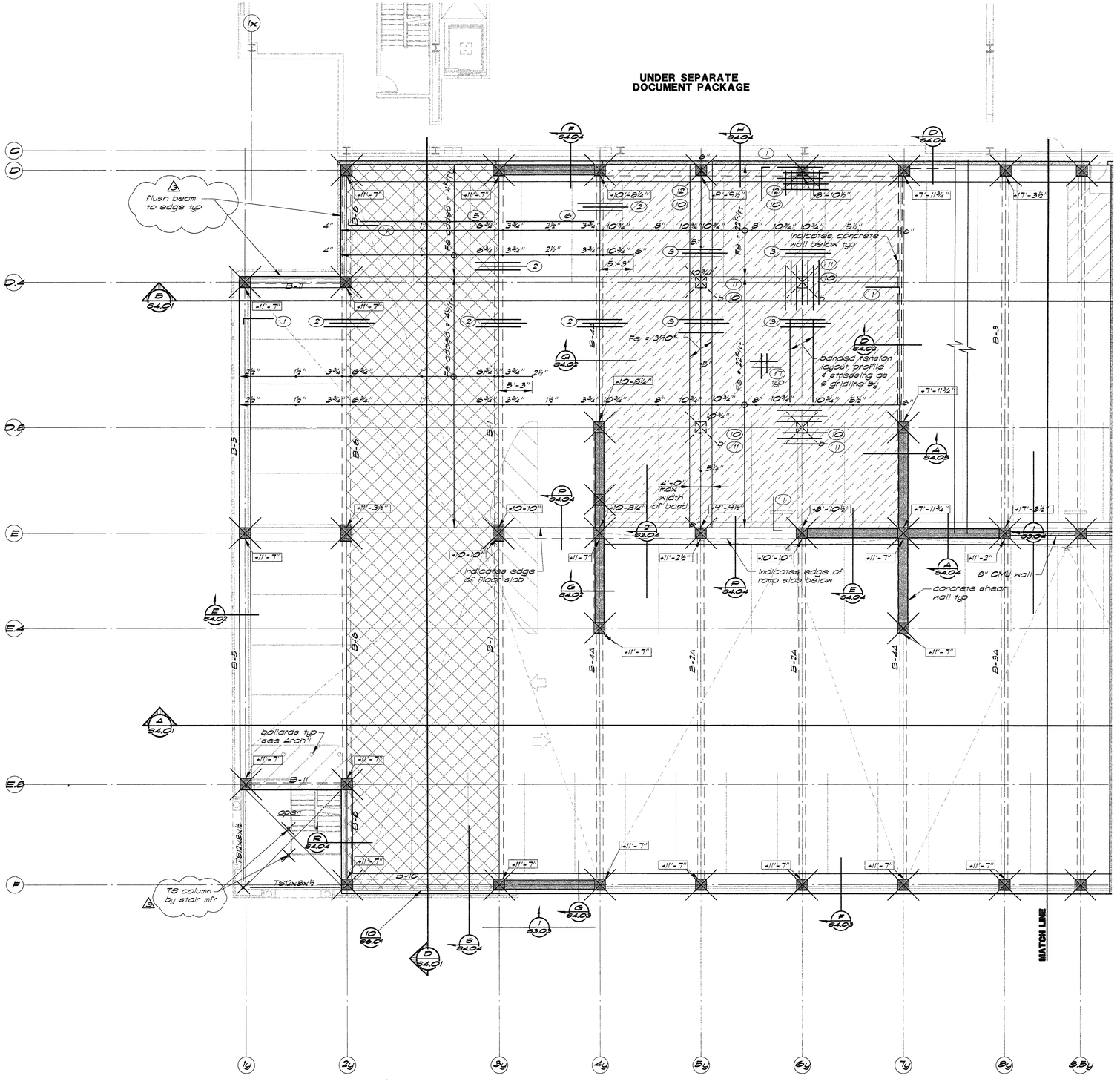

2nd Floor Framing Plan (West) — 1/8"=1'-0"

Plan Notes:

1. [11'-0"] Indicates elevation of top of structural slab above reference finished floor +0'-0".
2. See sheets S2.01G & S2.02G for column mark sizes.
3. B-1 Indicates beam elevation reference see schedule (S2.03)
4. For slab mild reinforcing, see (2/S2.03) key notes. Mild reinforcing shown on sheets S2.07G & S2.08G applies to all elevated slabs, uno. Place steel 1" clear from slab edge top, ¾" clear bottom.
5. (T) Indicates top reinforcing. (B) Indicates bottom reinforcing.
6. Post-tensioning shown on sheets S2.05G & S2.06G applies to all elevated slabs, uno. See sheet S5.01G for typical post-tensioning notes and details.
7. Shaded area indicates 60 day delay slab closure pour.
8. Contractor to submit any additional construction joint layout and details to Structural Engineer for approval.
9. Typical concrete slab shall be 5" thick.
10. Indicates 8" thick concrete slab.
11. Indicates 12" thick concrete slab.

(1/S2.03) Beam Elevation Sched.

Mk.	Size	Elevation
B-1	18" x 36"	1/S5.04
B-2/B-2A	14" x 36"	2/S5.04
B-3/B-3A	14" x 36"	2/S5.04
B-4/B-4A	18" x 36"	3/S5.04
B-5	24" x 36"	1/S5.05
B-6	18" x 36"	4/S5.04
B-7	18" x 36"	2/S5.05
B-8	18" x 36"	3/S5.05
B-9	18" x 36"	4/S5.05
B-10	24" x 24"	5/S5.05
B-11	12" x 24"	6/S5.05

(2/S2.03) Slab Reinforcing Key Notes:

1. (T) #5 @ 18"cc [12" / 6'-0"]
2. (T) #5 x 12'-0" @ 9"cc w/ 1'-0" stagger
3. (T) #5 x 9'-0" @ 24"cc w/ 1'-0" stagger
4. (T) #5 x 9'-0" @ 18"cc w/ 1'-0" stagger
5. (B) #5 @ 12"cc
6. (B) #5 @ 24"cc
7. 9 unbonded strands per bay @ center of slab (26.8 k/strand) - typ lines 1y to 3y and 14y to 18y see (5/S5.01) for temp reinforcing
8. 4 unbonded strands per bay @ center of slab (26.8 k/strand) - typ lines 1y to 2y, 3y to 14y, and 18y to 18y (except @ 12" slab on 2nd floor. See (5/S5.01) for temp reinforcing
9. (T) #5 @ 18"cc
10. (T) 7-#5 x 9'-0" in uniform direction. Layout per (5/S5.01) or (6/S5.01)
11. (T) 9-#5 x 9'-0" in banded direction. Layout per (5/S5.01)
12. (T) 9-#5 in banded direction Layout per (6/S5.01) 5'-0" c/c
13. Add'l 9-#9 @ 4"cc continuous. 7'-0" lap splice - stagger 50% 7'-0" min. Locate bars as shown in sections. Transition bars located in curb into the ℄ slab @ lines 4y & 13y.
14. Add'l 6-#9 @ 4"cc continuous. Lap splice as in (13)
15. Add'l reinforcing over all shearwalls - See sections.
16. Add'l 2-#6 @ 3"cc continuous from lines 1y to 3y & 14y to 18y. 6'-0" min. lap splice - stagger 6'-0" min. Locate bars @ ℄ slab - typ.
17. #5 @ 18"cc each way (B) @ 12" slab

This set of plans and specifications MUST be kept on the job at all times and it is unlawful to make any changes or alterations on same without written permission from the Architect.

By _____

The stamping of this plan does not relieve the applicant of the necessity to obtain any permit or to file any report required by any Ordinance or Law. Occupancy of structure not permitted until after final approval.

JOB SITE COPY

PLANS REVIEWED BY
Precision Inspection Company
Inspection and Consulting Services
Page 28 Of 154

ENGLISH HARPER RETA
ARCHITECTS

580 UNIVERSITY AVENUE SUITE 100
SACRAMENTO, CA 95825 (916) 568-1821

THIS DRAWING IS NOT FINAL OR TO BE USED FOR CONSTRUCTION UNTIL IT IS SIGNED BY THE ARCHITECT AND THE OWNER.

ARCHITECT
EDWARD P. ENGLISH C-10399
RICHARD L. HARPER C-13830
RONALD A. RETA C- 9879

OWNER

CONTRACTOR

REGISTERED PROFESSIONAL ENGINEER
RONALD A. RETA
No. C 13830
EXP. 3-31-01
STATE OF CALIFORNIA

Turner Construction Company

BUEHLER & BUEHLER ASSOCIATES
STRUCTURAL ENGINEERS, INC.
7300 Folsom Blvd., Suite 103
Sacramento, Ca. 95826
(916) 381-8181

REGISTERED PROFESSIONAL ENGINEER
LAWRENCE E. JONES
No. SE 3138
Exp. 12/31/01
STRUCTURAL
STATE OF CALIFORNIA

Essential Services Facility
(UNDER SEPARATE DOCUMENT PACKAGE)
Parking Garage

KEY PLAN

DATE	NO.	DESCRIPTION
1/13/00	3	Overall Permit Set
11/15/99	2	Progress Set
10/18/99	1	Progress Set

REVISIONS
DRAWN BY JBM
CHECKED BY DTE

Parking Garage
City of Stockton, California
FOUNDATION RE-DESIGN SET

DRAWING
2nd Floor Framing Plan (West)

PROJECT NO. 98113
DRAWING NO. S2.03G
CADFILE –
DATE 07 SEPTEMBER 1999

F:\98113\CAD\Comp\S2_03.dwg 01/17/00 11:33 BR Mark A. R.

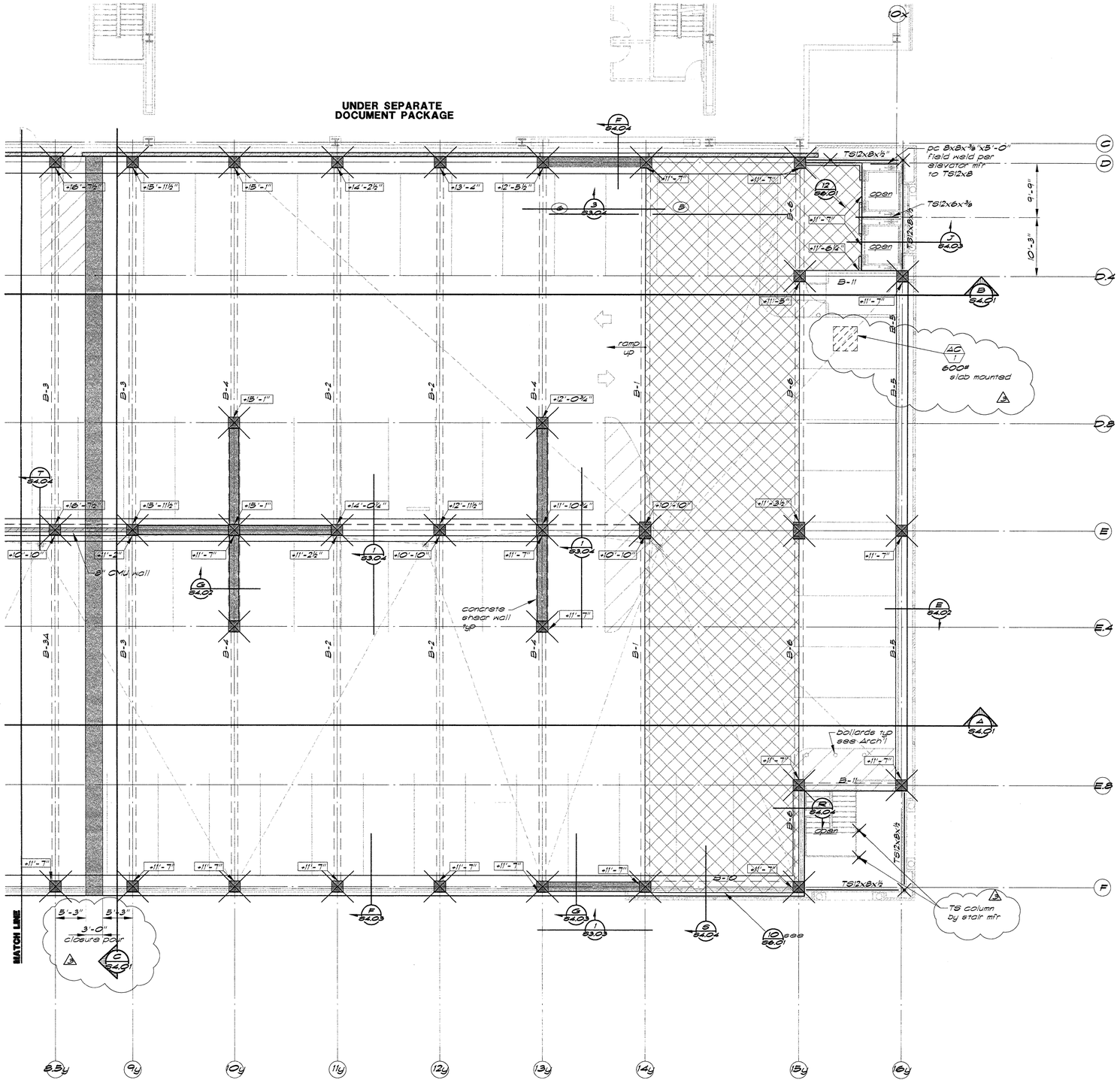

2nd Floor Framing Plan — 1/8"=1'-0"

Plan Notes:

1. See sheet S2.05 for typical plan notes.

This set of plans and calculations MUST be kept on the job at all times and it is unlawful to make any changes or alterations on same without written permission from Building Inspection, City of Stockton.

By _____ Date _____

The [illegible] held to permit [illegible] of any Ordinance or [illegible] permitted until after final approval.

JOB SITE COPY

PLANS REVIEWED BY
Precision Inspection Company
Inspection and Consulting Services
Page 29 of 79

ENGLISH HARPER RETA
ARCHITECTS

580 UNIVERSITY AVENUE
SACRAMENTO, CA 95825
SUITE 100
(916) 568-1821

THIS DRAWING IS NOT FINAL OR TO BE USED FOR CONSTRUCTION UNTIL IT IS SIGNED BY THE ARCHITECT AND THE OWNER.

ARCHITECT
EDWARD P. ENGLISH C-10399
RICHARD L. HARPER C-13830
RONALD A. RETA C- 9879

OWNER

CONTRACTOR

LICENSED ARCHITECT RICHARD L. HARPER REN. 3-31- STATE OF CALIFORNIA

Turner
Construction Company

BUEHLER & BUEHLER ASSOCIATES
STRUCTURAL ENGINEERS, INC.
7300 Folsom Blvd., Suite 103
Sacramento, Ca. 95826
(916) 381-8181

REGISTERED PROFESSIONAL ENGINEER LAWRENCE E. JONES No. SE 3138 Exp. 12/31/01 STRUCTURAL STATE OF CALIFORNIA

Essential Services Facility
(UNDER SEPARATE DOCUMENT PACKAGE)
Parking Garage

KEY PLAN

DATE	NO.	DESCRIPTION
1/13/00	3	Overall Permit Set
11/15/99	2	Progress Set
10/18/99	1	Progress Set

REVISIONS

DRAWN BY
JMB

CHECKED BY
DTE

Parking Garage
City of Stockton, California
FOUNDATION RE-DESIGN SET

DRAWING
2nd Floor Framing Plan
(East)

PROJECT NO.
98113

DRAWING NO.
S2.04G

CADFILE
S2_04.dwg

DATE
07 SEPTEMBER 1999

UNDER SEPARATE DOCUMENT PACKAGE

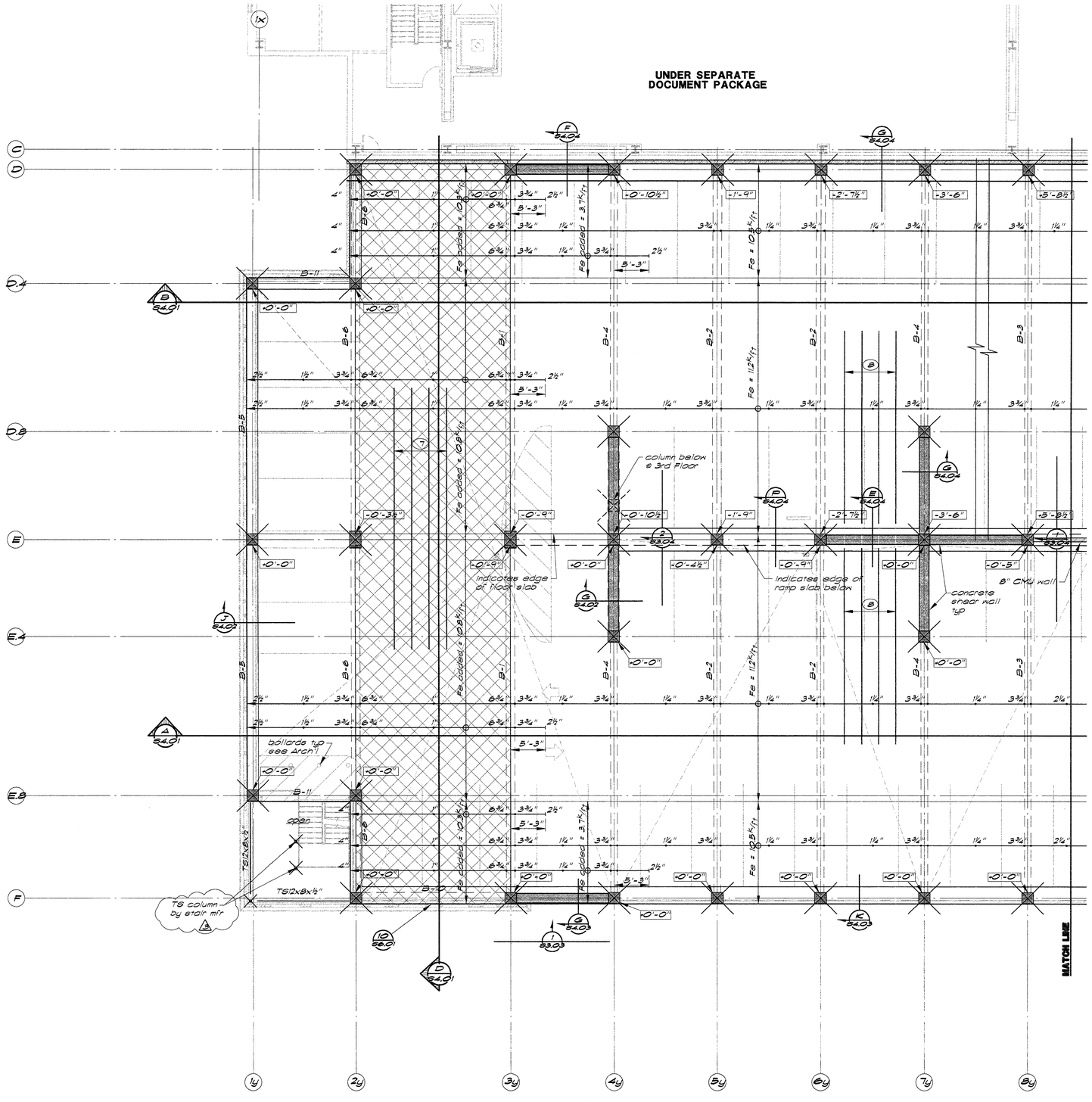

3rd thru 6th Floor Framing Plan (West) — ⅛"=1'-0"

Plan Notes:

1. *See sheet S2.03 for typical plan notes.*
2. *+1'-0" indicates elevation of top of finished slab relative to individual floor base elevations:*
   3rd Floor: -21'-8"
   4th Floor: -31'-9"
   5th Floor: -41'-10"
   6th Floor: -51'-11"
   (Base elevations from reference finish floor elevation +0'-0")

This set of plans and calculations MUST be kept on the job at all times and it is unlawful [illegible] without the permission of the Architect. [illegible]

The drawings, specifications and ideas, designs and arrangements represented thereby are and shall remain the property of the Architect. They are not to be used in whole or in part for any purpose whatsoever except with the written permission of the Architect and any unauthorized use [illegible] Ordinance of the City of Stockton. Plans will be stamped "JOB SITE COPY" after final approval.

JOB SITE COPY

PLANS REVIEWED BY
Precision Inspection Company
Inspection and Consulting Services
Page 30 Of 119

ENGLISH HARPER RETA
ARCHITECTS

580 UNIVERSITY AVENUE SUITE 100
SACRAMENTO, CA 95825 (916) 568-1821

THIS DRAWING IS NOT FINAL OR TO BE USED FOR CONSTRUCTION UNTIL IT IS SIGNED BY THE ARCHITECT AND THE OWNER.

ARCHITECT
EDWARD P. ENGLISH C-10399
RICHARD L. HARPER C-13830
RONALD A. RETA C- 9879

OWNER

CONTRACTOR

LICENSED ARCHITECT RICHARD L. HARPER No. C-13830 REN. 3-31- STATE OF CALIFORNIA

Turner Construction Company

BUEHLER & BUEHLER ASSOCIATES
STRUCTURAL ENGINEERS, INC.
7300 Folsom Blvd., Suite 103
Sacramento, Ca. 95826
(916) 381-8181

REGISTERED PROFESSIONAL ENGINEER LAWRENCE E. JONES No. SE 3138 Exp. 12/31/01 STRUCTURAL STATE OF CALIFORNIA

Essential Services Facility
(UNDER SEPARATE DOCUMENT PACKAGE)

Parking Garage

KEY PLAN

DATE	NO.	DESCRIPTION
1/13/00	2	Overall Permit Set
11/15/99	1	Progress Set
10/18/99	1	Progress Set

REVISIONS

DRAWN BY
JMB

CHECKED BY
TDO

Parking Garage
City of Stockton, California
FOUNDATION RE-DESIGN SET

DRAWING
3rd thru 6th Floor Framing Plan (West)
-

PROJECT NO. 98113
DRAWING NO. S2.05G
CADFILE -
DATE 07 SEPTEMBER 1999

P:\1998\9813\Comp\S2_05.mp 01/17/00 11:17:36 MARK A. R.

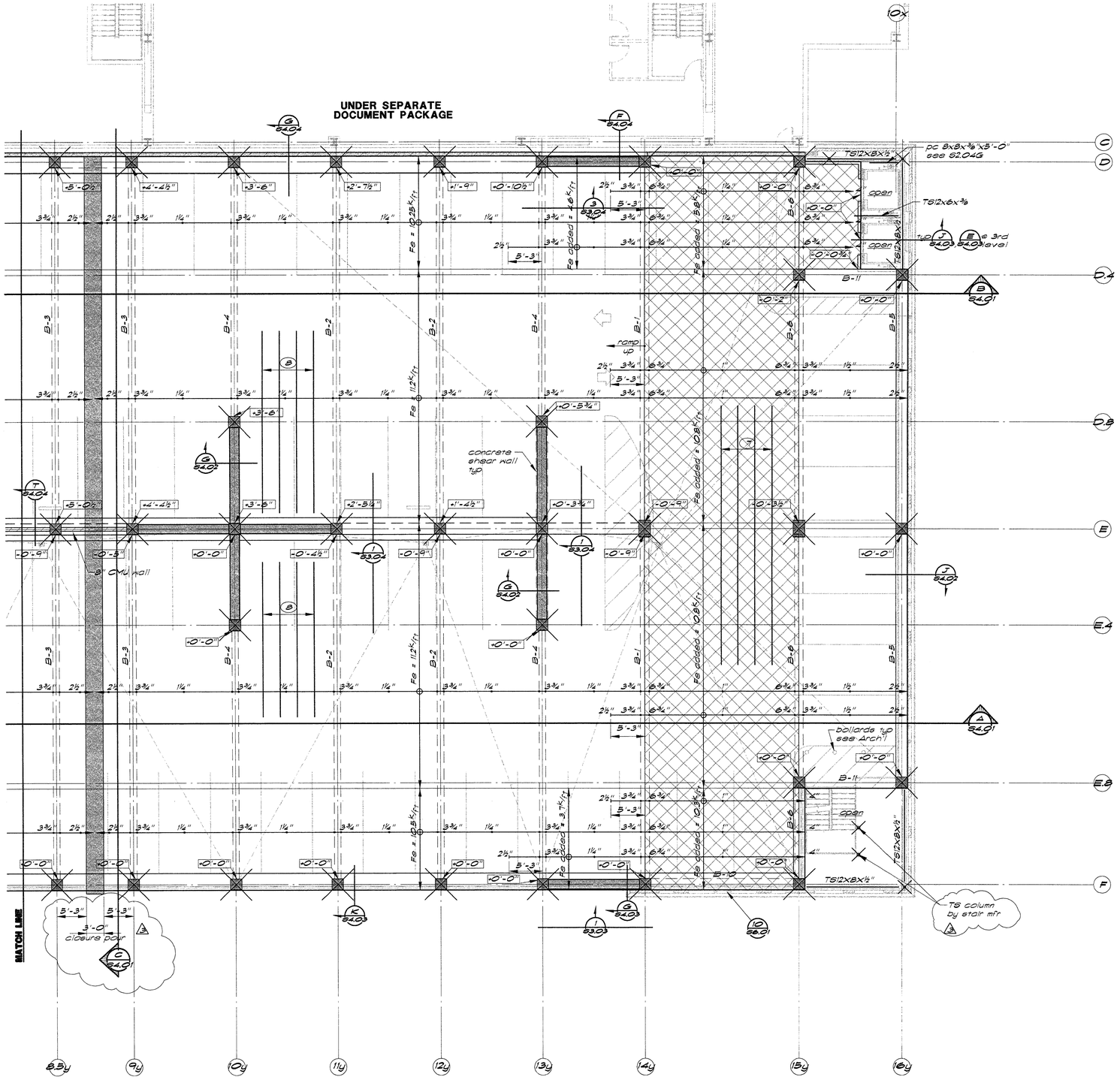

3rd thru 6th Floor Framing Plan — 1/8"=1'-0"

Plan Notes:

1. See sheet S2.05 for typical plan notes.

This set of plans and calculations MUST be kept on the job at all times and it is unlawful to make any changes or alterations on same, or to deviate therefrom without written permission of the Building Official. All work shall conform to the latest provisions of the Uniform Building Code and other applicable laws, rules and regulations governing the type of work specified.

The Building Official reserves the right to ... of any ... plans shall not be published until after final approval.

JOB SITE COPY

PLANS REVIEWED BY
Precision Inspection Company
Inspection and Consulting Services
Page 31 of 99

ENGLISH HARPER RETA
ARCHITECTS

580 UNIVERSITY AVENUE SUITE 100
SACRAMENTO, CA 95825 (916) 568-1821

THIS DRAWING IS NOT FINAL OR TO BE USED FOR CONSTRUCTION UNTIL IT IS SIGNED BY THE ARCHITECT AND THE OWNER.

ARCHITECT
EDWARD P. ENGLISH C-10399
RICHARD L. HARPER C-13830
RONALD A. RETA C- 9879

OWNER

CONTRACTOR

REGISTERED ARCHITECT RONALD A. RETA No. C-9879 REN. 3-31- STATE OF CALIFORNIA

Turner Construction Company

BUEHLER & BUEHLER ASSOCIATES
STRUCTURAL ENGINEERS, INC.
7300 Folsom Blvd., Suite 103
Sacramento, Ca. 95826
(916) 381-8181

REGISTERED PROFESSIONAL ENGINEER LAWRENCE JONES No. SE 1138 Exp. 12/31/01 STRUCTURAL STATE OF CALIFORNIA

Essential Services Facility (UNDER SEPARATE DOCUMENT PACKAGE)
Parking Garage

KEY PLAN

DATE	NO.	DESCRIPTION
1/13/00	3	Overall Permit Set
11/15/99	2	Progress Set
10/18/99	1	Progress Set

REVISIONS

DRAWN BY
JMB

CHECKED BY
TDO

Parking Garage
City of Stockton, California
FOUNDATION RE-DESIGN SET

DRAWING
3rd thru 6th Floor Framing Plan (East)
-

PROJECT NO.
98113

DRAWING NO.
S2.06G

CADFILE
-

DATE
07 SEPTEMBER 1999

P:\98000\00\Comp\S2_06.dwg 01/17/00 11:39:58 Mark A. R.

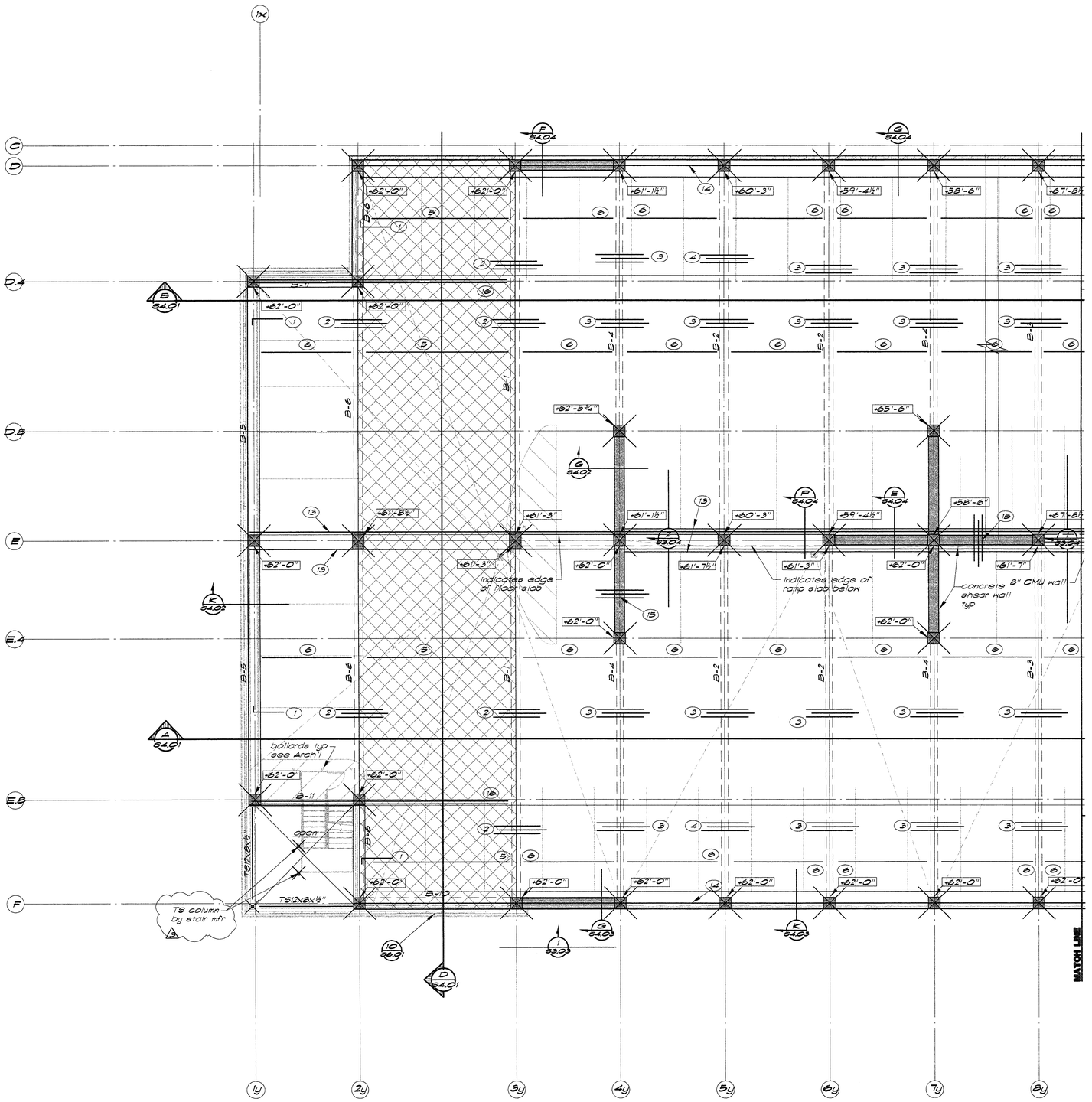

Plan Notes:

1. See sheet S2.03 for typical plan notes.

7th Floor Framing Plan (West) — ⅛"=1'-0"

This set of plans and calculations MUST be kept on the job at all times and approved changes are to be incorporated as they occur. These plans and calculations are copyrighted and property of the Architect and/or Engineer and may not be reused in any way without written consent. Violation of this law is subject to prosecution under the Ordinance of Law. Occupancy or building not permitted until after final approval.

JOB SITE COPY

PLANS REVIEWED BY
Precision Inspection Company
Inspection and Consulting Services
Page 32 Of

ENGLISH HARPER RETA
ARCHITECTS

580 UNIVERSITY AVENUE SUITE 100
SACRAMENTO, CA 95825 (916) 568-1821

THIS DRAWING IS NOT FINAL OR TO BE USED FOR CONSTRUCTION UNTIL IT IS SIGNED BY THE ARCHITECT AND THE OWNER.

ARCHITECT
EDWARD P. ENGLISH C-10399
RICHARD L. HARPER C-13830
RONALD A. RETA C- 9879

OWNER

CONTRACTOR

RICHARD L. HARPER No. C-13830 REN. 3-31- STATE OF CALIFORNIA

Turner Construction Company

BUEHLER & BUEHLER ASSOCIATES
STRUCTURAL ENGINEERS, INC.
7300 Folsom Blvd., Suite 103
Sacramento, Ca. 95826
(916) 381-8181

REGISTERED PROFESSIONAL ENGINEER LAWRENCE E. JONES No. SE 3138 Exp. 12/31/01 STRUCTURAL STATE OF CALIFORNIA

Essential Services Facility (UNDER SEPARATE DOCUMENT PACKAGE)

Parking Garage

KEY PLAN

DATE	NO.	DESCRIPTION
1/13/00	3	Overall Permit Set
11/15/99	2	Progress Set
10/18/99	1	Progress Set

REVISIONS

DRAWN BY
JMB

CHECKED BY
DTE

Parking Garage
City of Stockton, California
FOUNDATION RE-DESIGN SET

DRAWING
7th Floor Framing Plan (West)
-

PROJECT NO. 98113
DRAWING NO. S2.07G
CADFILE -
DATE 07 SEPTEMBER 1999

F:\jobs\9813\comp\S2_07.dwg 01/17/00 11:40:56 Mark A. R.

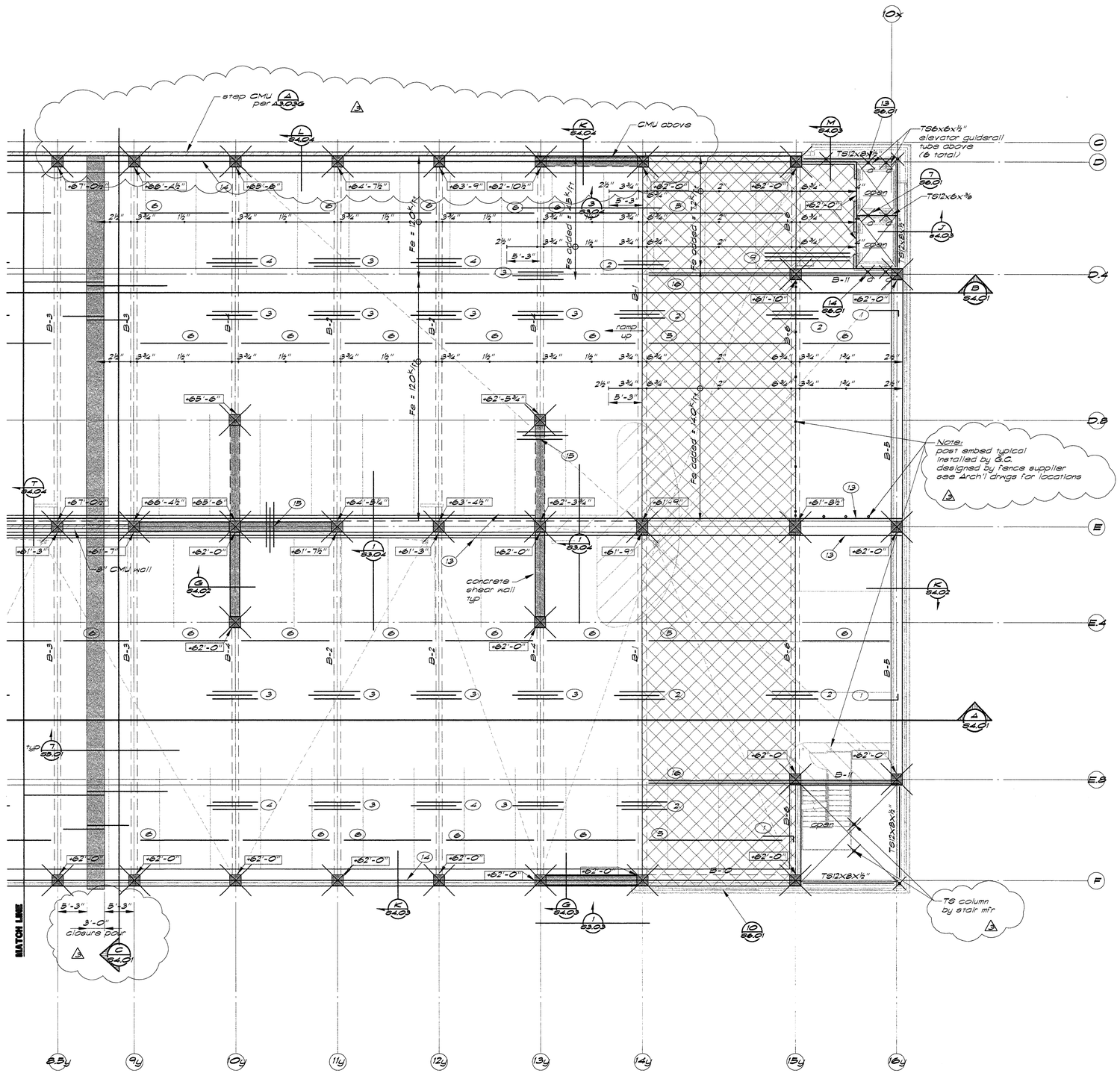

7th Floor Framing Plan (East) — 1/8"=1'-0"

Plan Notes:

1. See sheet s2.03 for typical plan notes.

ENGLISH HARPER RETA
ARCHITECTS

580 UNIVERSITY AVENUE SUITE 100
SACRAMENTO, CA 95825 (916) 568-1821

THIS DRAWING IS NOT FINAL OR TO BE USED FOR CONSTRUCTION UNTIL IT IS SIGNED BY THE ARCHITECT AND THE OWNER.

ARCHITECT
EDWARD P. ENGLISH C-10399
RICHARD L. HARPER C-13830
RONALD A. RETA C- 9879

OWNER

CONTRACTOR

LICENSED ARCHITECT RICHARD L. HARPER No. C-13830 REN. 3-31- STATE OF CALIFORNIA

Turner Construction Company

BUEHLER & BUEHLER ASSOCIATES
STRUCTURAL ENGINEERS, INC.
7300 Folsom Blvd., Suite 103
Sacramento, Ca. 95826
(916) 381-8181

REGISTERED PROFESSIONAL ENGINEER LAWRENCE E. JONES No. SE 3138 Exp. 12/31/01 STRUCTURAL STATE OF CALIFORNIA

Essential Services Facility (UNDER SEPARATE DOCUMENT PACKAGE)

Parking Garage

KEY PLAN

DATE	NO.	DESCRIPTION
1/13/00	3	Overall Permit Set
11/15/99	2	Progress Set
10/18/99	1	Progress Set

REVISIONS

DRAWN BY
JMB

CHECKED BY
DTE

The drawings, specifications and ideas incorporated herein are the property of the architect and shall not be used in any manner except for the specified project without written permission of the architect. Visual contact with these drawings shall constitute prima facie evidence of the acceptance of these restrictions. Reproduction of these drawings is prohibited until after final approval.

JOB SITE COPY

Parking Garage
City of Stockton, California
FOUNDATION RE-DESIGN SET

DRAWING
7th Floor Framing Plan (East)

PROJECT NO. 98113
DRAWING NO. S2.08G
CADFILE –
DATE 07 SEPTEMBER 1999

PLANS REVIEWED BY Precision Inspection Company Inspection and Consulting Services
Page 33 of 99

F:\1998\9813\Garage\S2_08.dwg 01/17/00 11:42:56 Mark A. R.

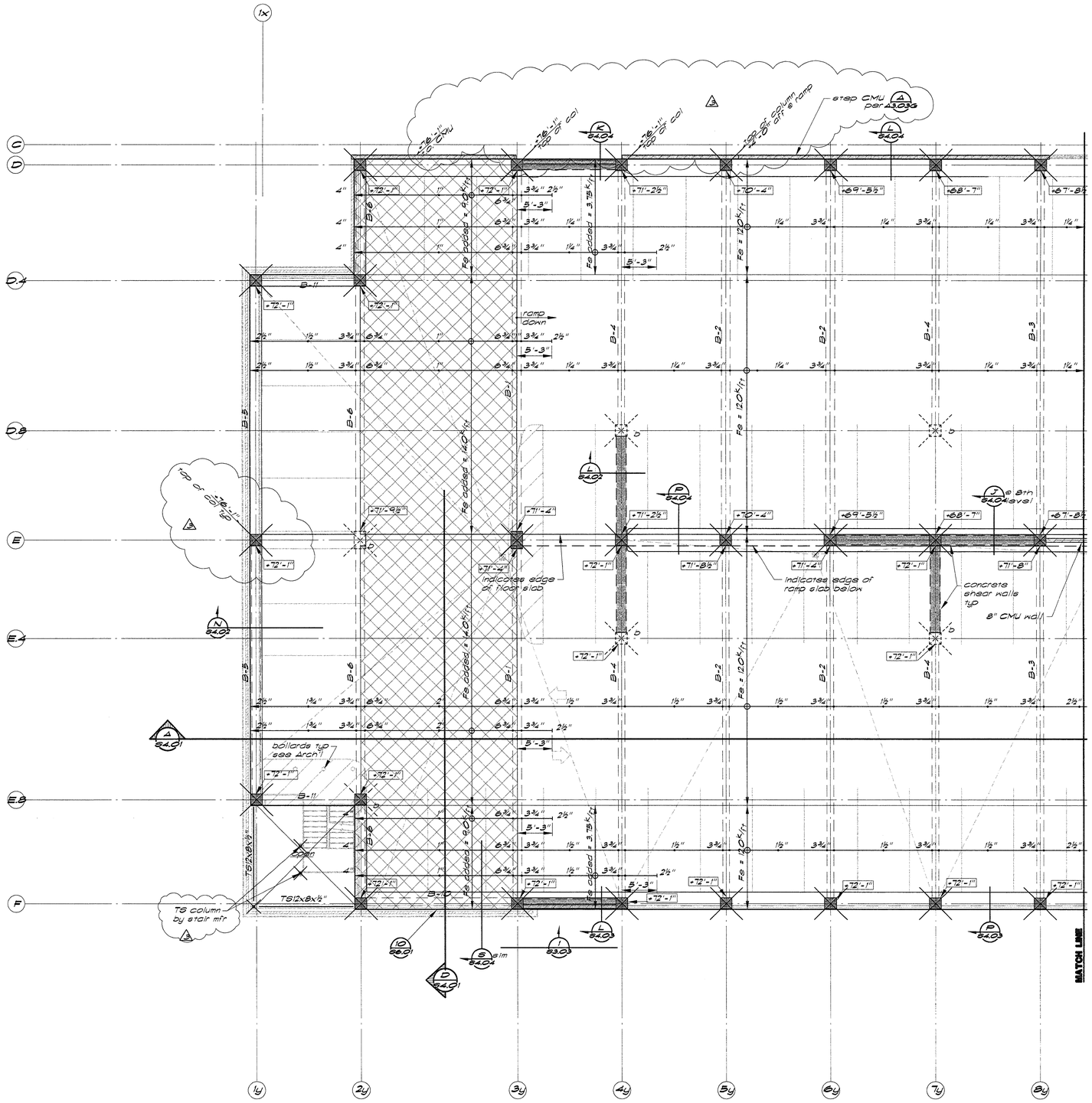

8th Floor Framing Plan (West) — 1/8"=1'-0"

Plan Notes:

1. See sheet S203 for typical plan notes.

This set of plans and specifications ... and is ... property of ... Architects and is not to be used in whole or in part ... without the written permission of ... Architects.

By: ...

The reproduction of these documents WILL NOT be held to ... any provisions of any ... Copyright is claimed not permitted until after ... date appears.

JOB SITE COPY

PLANS REVIEWED BY
Precision Inspection Company
Inspection and Consulting Services
Page 30 of 79

ENGLISH HARPER RETA
ARCHITECTS

580 UNIVERSITY AVENUE SUITE 100
SACRAMENTO, CA 95825 (916) 568-1821

THIS DRAWING IS NOT FINAL OR TO BE USED FOR CONSTRUCTION UNTIL IT IS SIGNED BY THE ARCHITECT AND THE OWNER.

ARCHITECT
EDWARD P. ENGLISH C-10399
RICHARD L. HARPER C-13830
RONALD A. RETA C- 9879

OWNER

CONTRACTOR

LICENSED ARCHITECT RICHARD L. HARPER C-13830 REN. 3-31- STATE OF CALIFORNIA

Turner Construction Company

BUEHLER & BUEHLER ASSOCIATES
STRUCTURAL ENGINEERS, INC.
7300 Folsom Blvd., Suite 103
Sacramento, Ca. 95826
(916) 381-8181

REGISTERED PROFESSIONAL ENGINEER LAWRENCE E. JONES No. SE 3138 Exp. 12/31/01 STRUCTURAL STATE OF CALIFORNIA

Essential Services Facility (UNDER SEPARATE DOCUMENT PACKAGE)
Parking Garage

KEY PLAN

DATE	NO.	DESCRIPTION
1/13/00	3	Overall Permit Set
11/15/99	2	Progress Set
10/18/99	1	Progress Set

REVISIONS

DRAWN BY
JMB

CHECKED BY
DTE

Parking Garage
City of Stockton, California
FOUNDATION RE-DESIGN SET

DRAWING
8th Floor Framing Plan (West)

PROJECT NO. 98113
DRAWING NO. S2.09G
CADFILE S2_09
DATE 07 SEPTEMBER 1999

F:\1998\98200\Design\S2_09.dwg 01/17/00 11:43 98 work A. R.

Plan Notes:

1. See sheet S2.03 for typical plan notes.

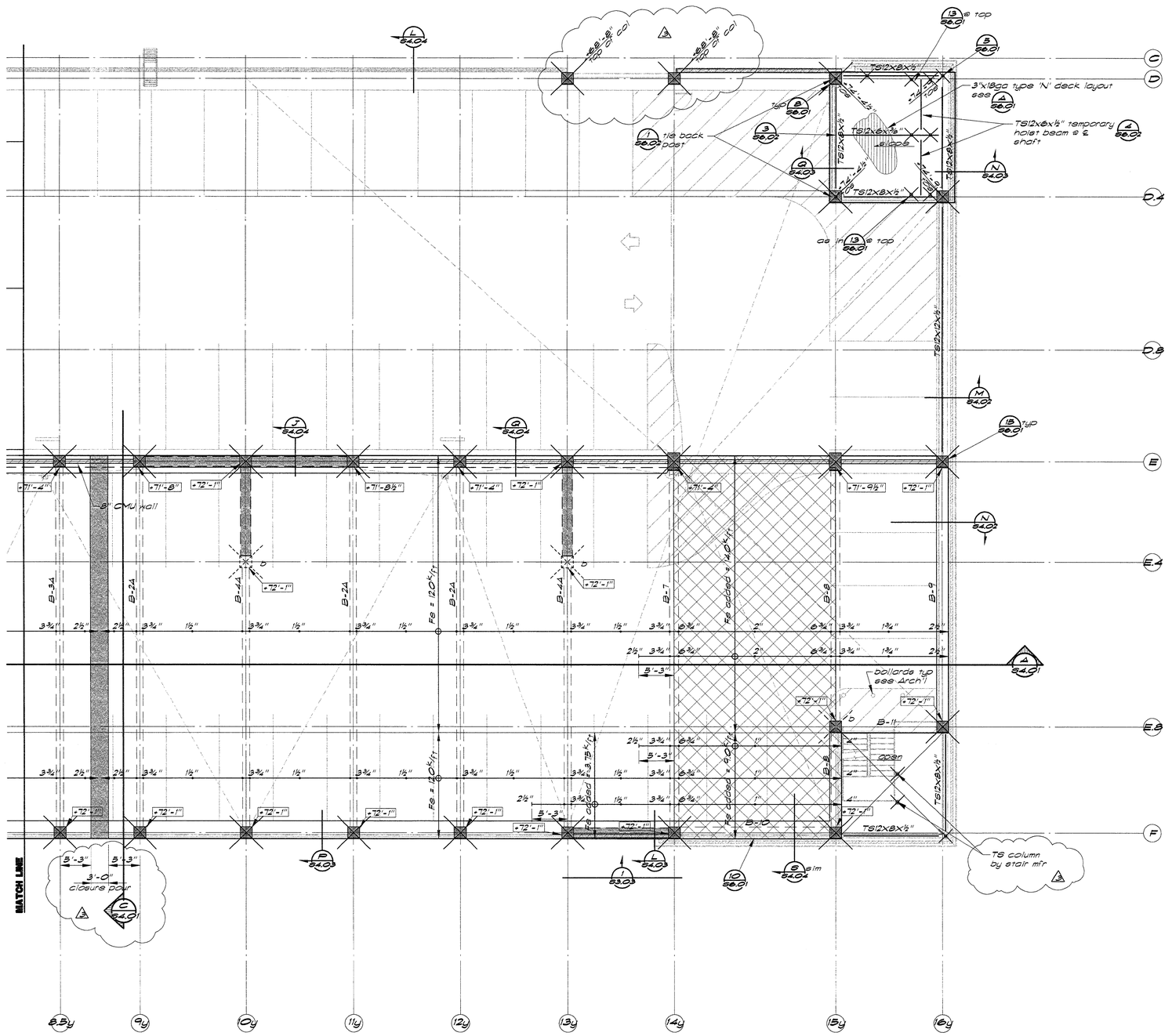

8th Floor Framing Plan (East) — ⅛"=1'-0"

JOB SITE COPY

PLANS REVIEWED BY
Precision Inspection Company
Inspection and Consulting Services
Page 35 of 79

ENGLISH HARPER RETA
ARCHITECTS

580 UNIVERSITY AVENUE SUITE 100
SACRAMENTO, CA 95825 (916) 568-1821

THIS DRAWING IS NOT FINAL OR TO BE USED FOR CONSTRUCTION UNTIL IT IS SIGNED BY THE ARCHITECT AND THE OWNER.

ARCHITECT
EDWARD P. ENGLISH C-10399
RICHARD L. HARPER C-13830
RONALD A. RETA C- 9879

OWNER

CONTRACTOR

Turner Construction Company

BUEHLER & BUEHLER ASSOCIATES
STRUCTURAL ENGINEERS, INC.
7300 Folsom Blvd., Suite 103
Sacramento, Ca. 95826
(916) 381-8181

REGISTERED PROFESSIONAL ENGINEER LAWRENCE E. JONES No. SE 3138 Exp. 12/31/01 STRUCTURAL STATE OF CALIFORNIA

KEY PLAN

DATE	NO.	DESCRIPTION
1/13/00	3	Overall Permit Set
11/15/99	2	Progress Set
10/18/99	1	Progress Set

REVISIONS

DRAWN BY
JMB

CHECKED BY
DTE

Parking Garage
City of Stockton, California
FOUNDATION RE-DESIGN SET

DRAWING
8th Floor Framing Plan (East)
-

PROJECT NO. 98113
DRAWING NO. S2.10G
CADFILE -
DATE 07 SEPTEMBER 1999

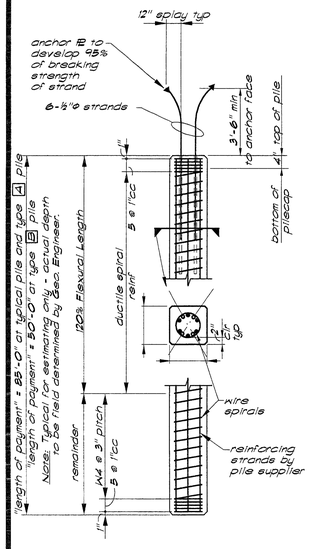

Pile Notes:

1. Use ½"ø ASTM 416-68 gr. 270 "Lowlax" strands; f'_s = 258,000 p.s.i. A_s = .153"²
2. Intial tension: 28,900 #/strand Effect. Prestress: 830 p.s.i.
3. Concrete strength:
   f'_c = 4,000 psi @ transfer
   f'_c = 7,000 psi @ 28 days for type A piles
   6,500 psi * @ 28 days for typical piles and type B Piles
   * 6,220 psi minimum max allowed on an exception basis only (see RFI log) 2
4. Design load capacities:

Typical 14" # piles	Type A piles	Type B piles
DL = 200k	DL = 200k	DL = 100k
DL+LL = 300k	DL+LL = 300k	DL+LL = 150k
DL+LL+S = 400k	DL+LL+S = 400k	DL+LL+S = 200k
Lateral = 9k	Lateral = 9k	Lateral = 9k
Tension = 80k	Tension = 150k	Tension = 50k
Max moment @ top = 35 k-ft	Max moment @ top = 35 k-ft	Max moment @ top = 35 k-ft
Flexural length = 25 ft	Flexural length = 25 ft	Flexural length = 25 ft

see (2/23.0) for pile to pilecap extension

5. Pile Design Criteria:
   Combine axial load & bending:
   1) 1.4 (D+L+E)
   2) 1.4D+1.7L
   3) 0.75D+1.4S
   Ductile ties in accordance w/UBC 1809.5
6. Placement of piles shall conform to the soils report # 3150.001 by Geomatrix Consultants dated 9/1999, and under the continuous observation by a representative of that firm. Final pile depths to be determined in the field by the Geotechnical Engineer.
7. If pile must be cut off, extend a minimum of 3'-6" of strand into pilecap splayed out to top mat with specified anchor plate
8. Pile extension detail, if required, to be submitted to and approved by Structural Engineer
9. Pre-drilling should be used to clear underground debris. Pre-drill depth should not exceed 10'-0" below bottom of pilecap
10. Provide driving follower to protect steel and strand extended from pile typical

14"# Prestressed Concrete Pile (1/23.0) — ⅜"=1'-0"

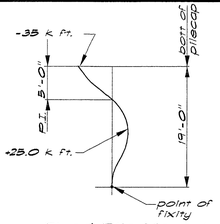

Fixed Pile Moment Diagram

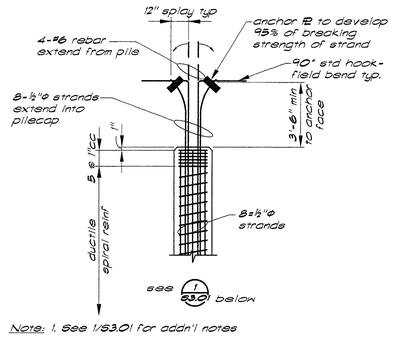

Note: 1. See 1/S3.01 for addn'l notes

Type A Pile Connection Detail (2/23.0) — ⅜"=1'-0"

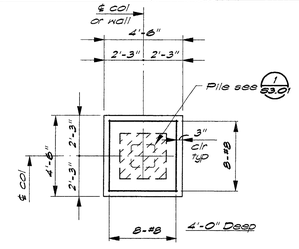

1 One Pile Cap (3/23.0) — ⅜"=1'-0"

1B Indicates Type B pile-see (1/23.0)

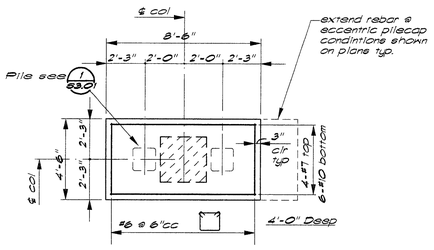

2 Two Pile Cap (4/23.0) — ⅜"=1'-0"

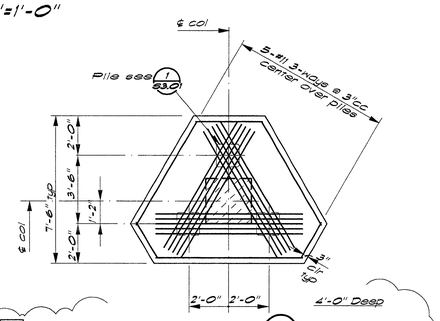

3 Three Pile Cap (6/23.0) — ⅜"=1'-0"

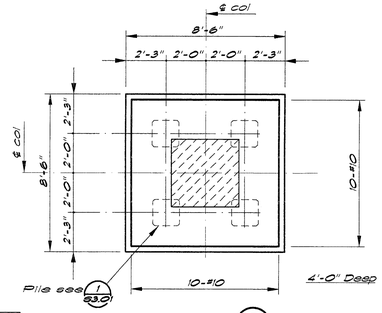

4 Four Pile Cap (7/23.0) — ⅜"=1'-0"

4D Provide specified reinforcing steel top and bottom

Typical Pilecap Notes (5/23.0)

1. All pilecaps to have top curtain of #4 at 12"cc each way, 3" clear from top of pilecap uno. See detail (1/23.0). Type A & B pilecaps shall have specified reinforcing top and bottom & Type C as noted in details
2. Contractor and job inspector shall notify Structural Engineer of any pile not driven in its proper location as shown on drawings so that corrective measures may be taken if required.
3. Where wall occure across the top or into the side of pilecaps, provide dowels from pilecap same size and spacing as wall reinforcing. Project dowels 40 diameters above pilecap.
4. Bottom mat reinforcing at pilecaps to be 6" clear from bottom of cap. Place longitudinal bars on bottom.
5. Concrete pilecap 28 day strength to be F'_c = 4000 p.s.i. u.n.o.
6. All bottom reinforcing has 180° std hook at each end typical. option to use 90° std hooks at top bars at Type A caps
7. Use typical piles uno. Type A pile caps uses Type A pile where noted on details. Type B pile caps uses Type B pile. Type C & D pile caps uses a typical pile. See plan for special location.

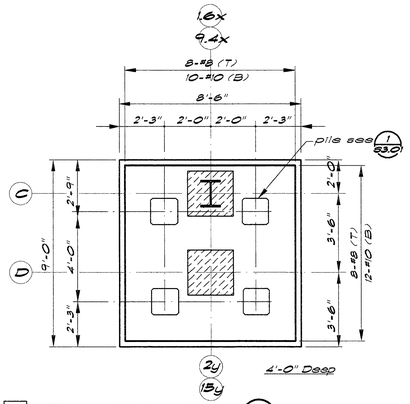

4C Four Pile Cap (8/23.0) — ⅜"=1'-0"

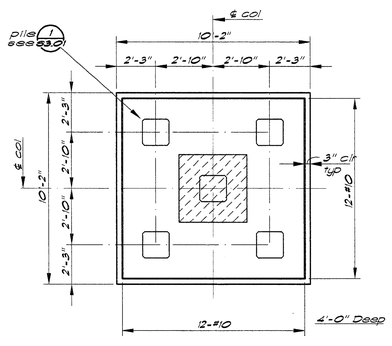

5 Five Pile Cap (9/23.0) — ⅜"=1'-0"

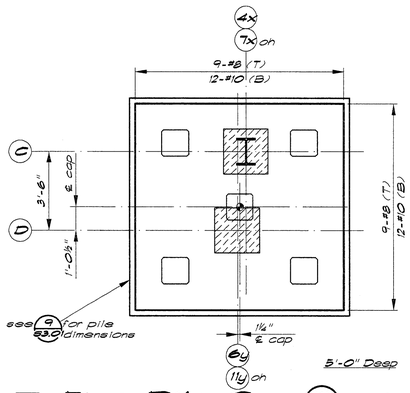

5C Five Pile Cap (10/23.0) — ⅜"=1'-0"

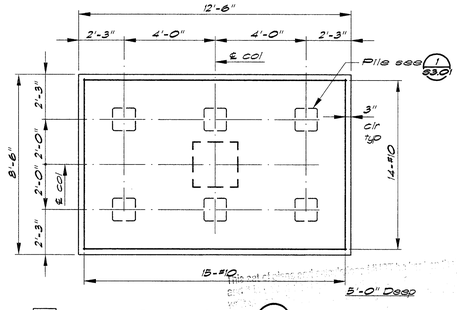

6 Six Pile Cap (11/23.0) — ⅜"=1'-0"

6A Provide Type A pile and use indicated steel at top and bottom of pilecap

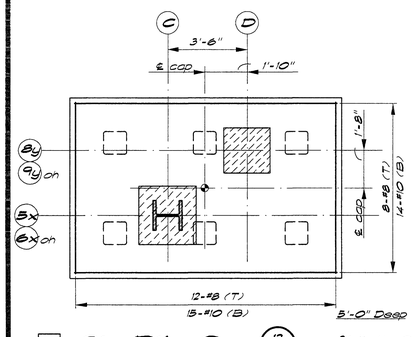

6C Six Pile Cap (12/23.0) — ⅜"=1'-0"

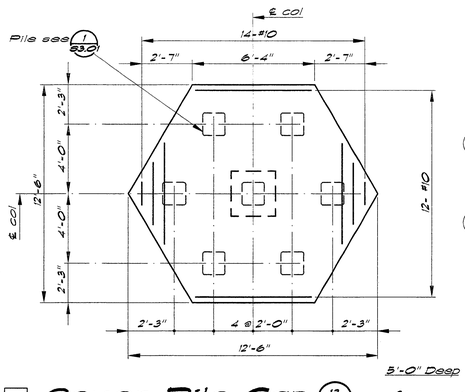

7 Seven Pile Cap (13/23.0) — ⅜"=1'-0"

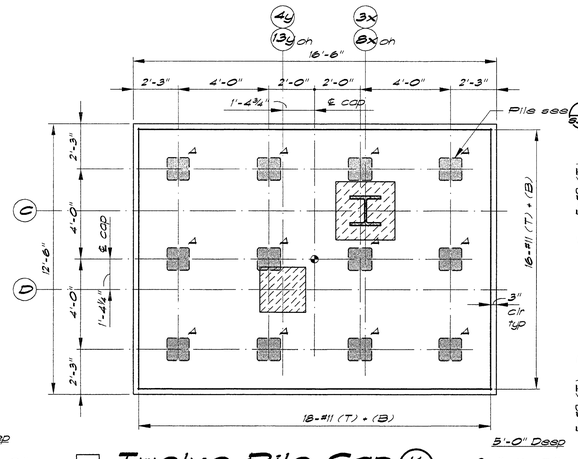

12A Twelve Pile Cap (14/23.0) — ⅜"=1'-0"

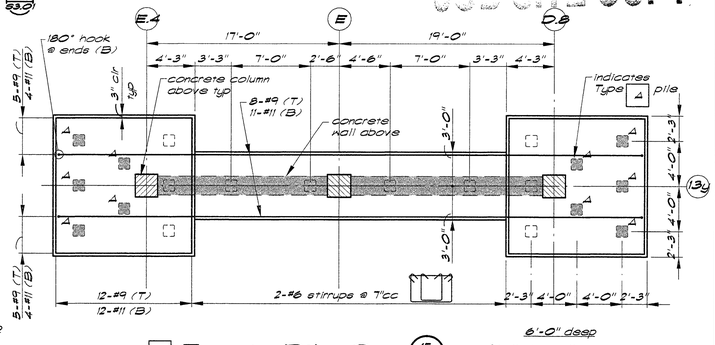

20 Twenty Pile Cap (15/23.0) — 3/16"=1'-0"

PLANS REVIEWED BY
Inspection and Consulting Services
Page 36 Of 99

ENGLISH HARPER RETA
ARCHITECTS

580 UNIVERSITY AVENUE SUITE 100
SACRAMENTO, CA 95825 (916) 568-1821

THIS DRAWING IS NOT FINAL OR TO BE USED FOR CONSTRUCTION UNTIL IT IS SIGNED BY THE ARCHITECT AND THE OWNER.

ARCHITECT
EDWARD L. ENGLISH C-10399
RICHARD L. HARPER C-13830
RONALD A. RETA C- 9879

OWNER

CONTRACTOR

REGISTERED ARCHITECT RICHARD L. HARPER No. C-13830 EXP. 3-31-01 STATE OF CALIFORNIA

Turner Construction Company

BUEHLER & BUEHLER ASSOCIATES
STRUCTURAL ENGINEERS, INC.
7300 Folsom Blvd., Suite 103
Sacramento, Ca. 95826
(916) 381-8181

REGISTERED PROFESSIONAL ENGINEER LAWRENCE E. JONES No. SE 3138 Exp. 12/31/01 STRUCTURAL STATE OF CALIFORNIA

Essential Services Facility (UNDER SEPARATE DOCUMENT PACKAGE)

Parking Garage

KEY PLAN

DATE	NO.	DESCRIPTION
1/13/00	3	Overall Permit Set
11/15/99	2	Progress Set
10/18/99	1	Progress Set

REVISIONS

DRAWN BY
JDO

CHECKED BY
LEJ

Parking Garage
City of Stockton, California
FOUNDATION RE-DESIGN SET

DRAWING
PILE + PILE CAP DETAILS

PROJECT NO. 98113
DRAWING NO. S3.01G
CADFILE s3_01.dwg
DATE 24 SEPTEMBER 1999

Plans not to be held to be in conformance with all applicable codes and provisions of any Ordinance or Law. Occupancy of structure not permitted until after final approval.

FOR CITY COPY

F:\1998\9805\Dwg\S3_01.dwg 01/17/00 13:56 98 Mark A.R.

Column Schedule (A S3.02)

Level	C1	C2	C3	C4
8th floor	C1A: add 2-#11; 10-#11; #4 1'6"ø @4"cc. C1B: add 2-#11.	C2A: add 2-#11 (14 total); 12-#11. C2B: add 2-#11; 12-#11.	C3A: 14-#11.	C4A: add 2-#11 (14 total); 12-#11. C4B: add 2-#11; 12-#11. C4C: add 2-#11; 12-#11.
7th floor	10-#11; 36ø lap above 4th flr; 10-#11.	12-#11.	14-#11.	12-#11. #4 1'6"ø @4"cc.
6th floor				
5th floor				
4th floor	10-#11; 56ø lap below 4th flr.	12-#11.	14-#11.	12-#11.
3rd floor				C4D: discontinue @ 3rd floor.
2nd floor	C1D			
T.O. pile cap	10-#11; #4 1'6"ø @4"cc; 10-#11; 3'-0" typ.	add 2-#11; 12-#11.	14-#11.	add 2-#11; 12-#11. 2'-0".
Detail	(2 S3.02) ø added	(3 S3.02) (4 S3.02) ø added	(5 S3.02)	(3 S3.02) (4 S3.02) ø added

terminator where col. is discontinuous above see note 2.

Note:

1. Use 4000 psi minimum 28 day strength for concrete columns typ.
2. Lenton terminators from ERICO Products, Inc., or equivalent. Terminators must develop 125% of the yield strength of the rebar.
3. Mechanical couplers may be used in lieu of lap splices. Couplers must develop 125% of the yield strength of the rebar and must be located within the middle 1/3 of the column clear height. Couplers used in column type C4 must develop the lesser of 160% of the yield strength of the rebar or 95% of the ultimate strength of the rebar. 50% of the couplers at any column splice must be staggered 24"cc
4. Rebar used for column ties and vertical reinforcing must conform to ASTM A706 or may conform to ASTM A615 if mill certs show that the steel used has 60ksi ≤ Fy < 78ksi and Fu/Fy ≥ 1.25. In any case mill certs shall be submitted.
5. See plans and sections for column locations and top of column elevations.
6. See detail (2 S3.02) for typical column elevation.

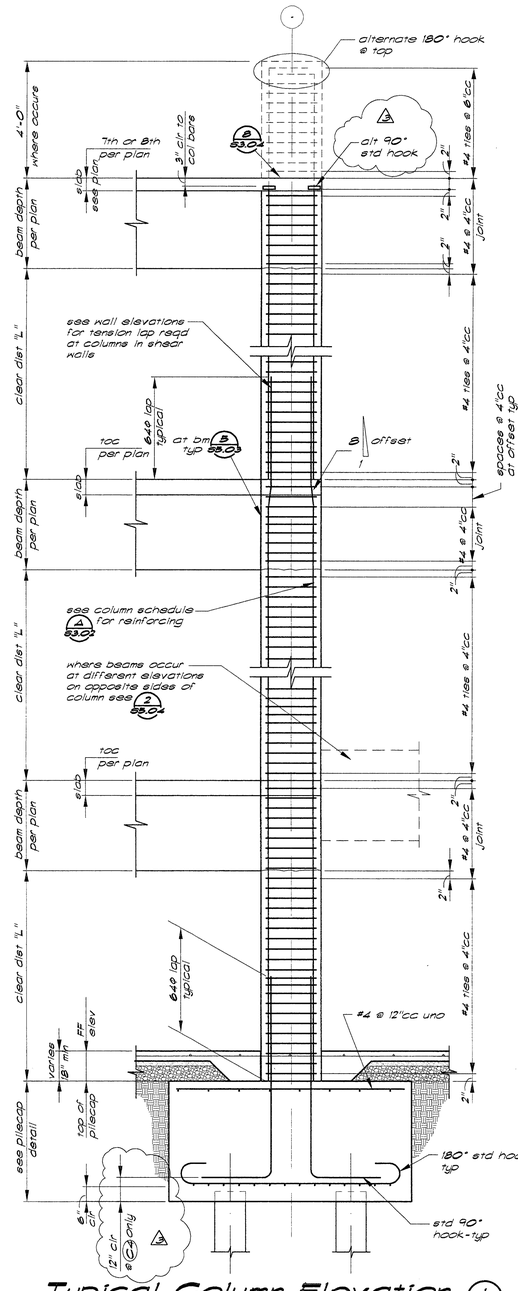

Typical Column Elevation (1 S3.02)

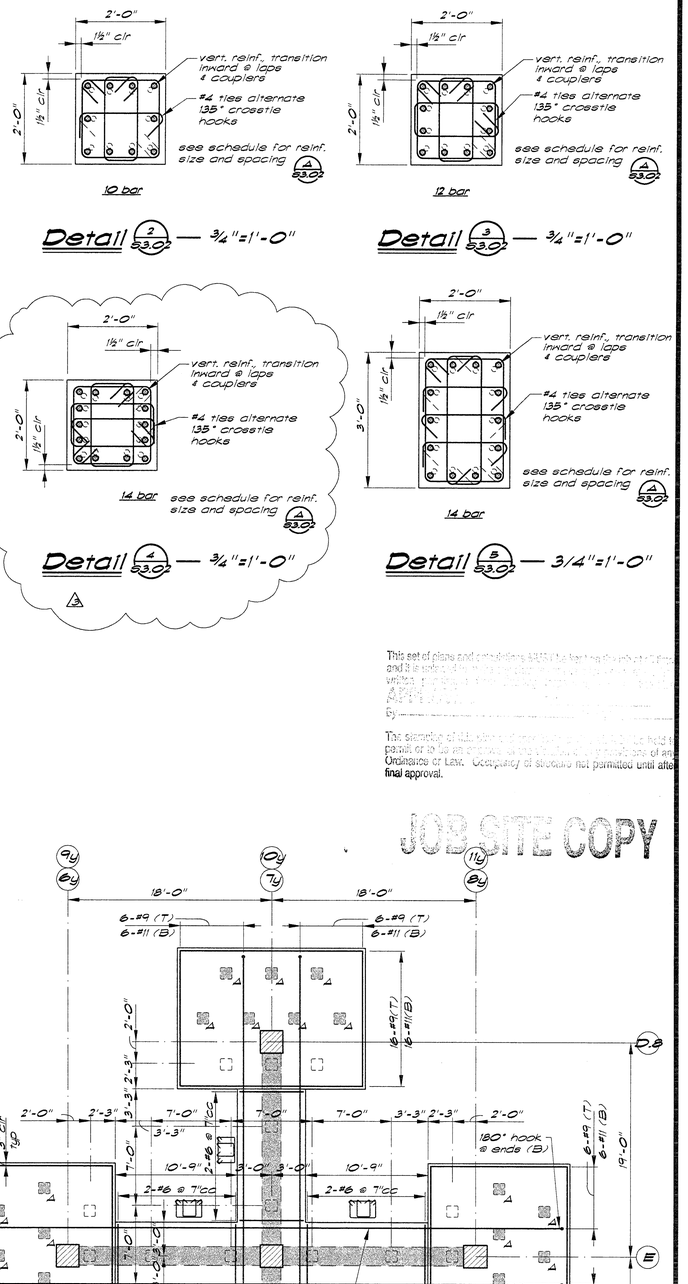

Detail (2 S3.02) — 3/4"=1'-0"

Detail (3 S3.02) — 3/4"=1'-0"

Detail (4 S3.02) — 3/4"=1'-0"

Detail (5 S3.02) — 3/4"=1'-0"

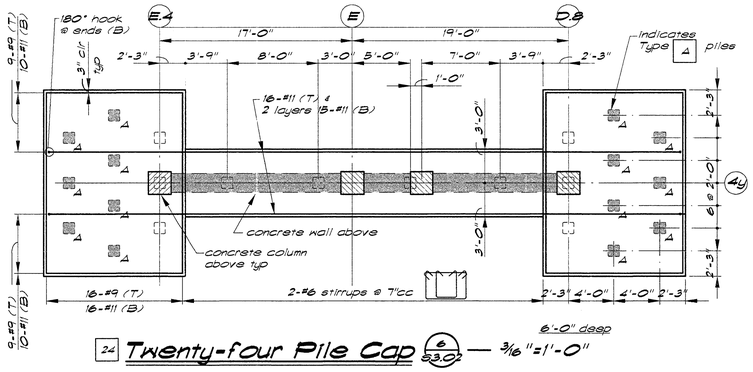

24 Twenty-four Pile Cap (6 S3.02) — 3/16"=1'-0"

6'-0" deep

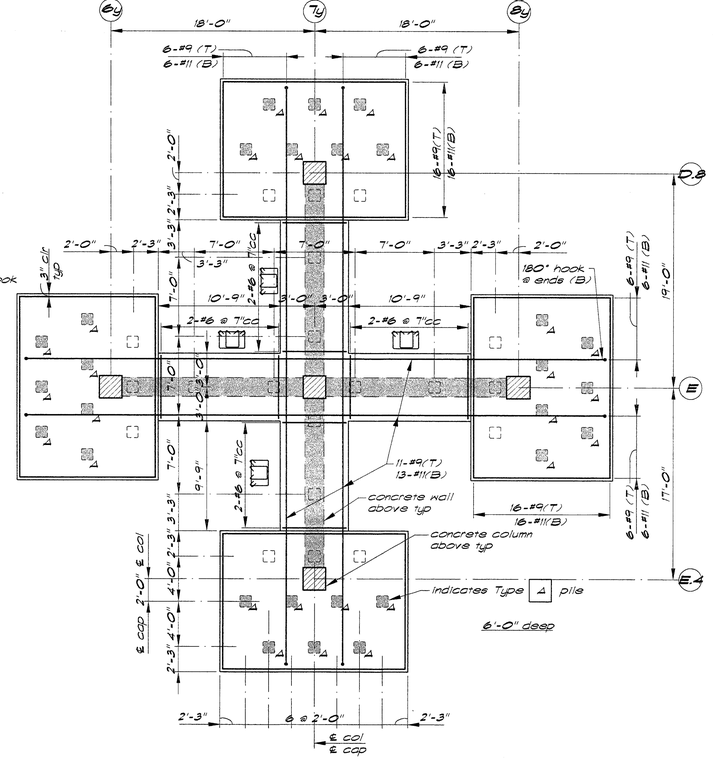

48 Forty-eight Pile Cap (7 S3.02) — 3/16"=1'-0"

PLANS REVIEWED BY Precision Inspection Company Inspection and Consulting Services

Page 39 of 119

ENGLISH HARPER RETA
ARCHITECTS

580 UNIVERSITY AVENUE SUITE 100
SACRAMENTO, CA 95825 (916) 568-1821

THIS DRAWING IS NOT FINAL OR TO BE USED FOR CONSTRUCTION UNTIL IT IS SIGNED BY THE ARCHITECT AND THE OWNER.

ARCHITECT
EDWARD P. ENGLISH C-10399
RICHARD L. HARPER C-13830
RONALD A. RETA C- 9879

OWNER

CONTRACTOR

Turner Construction Company

BUEHLER & BUEHLER ASSOCIATES
STRUCTURAL ENGINEERS, INC.
7300 Folsom Blvd., Suite 103
Sacramento, Ca. 95826
(916) 381-8181

REGISTERED PROFESSIONAL ENGINEER LAWRENCE E. JONES No. SE 3138 Exp. 12/31/01 STRUCTURAL STATE OF CALIFORNIA

This set of plans and [illegible] and is [illegible] while [illegible] APPROVED By: [illegible]

The signing of this [illegible] permit or to be an approval [illegible] Ordinance or Law. Occupancy of structure not permitted until after final approval.

JOB SITE COPY

Essential Services Facility (UNDER SEPARATE DOCUMENT PACKAGE)

Parking Garage

KEY PLAN

DATE	NO.	DESCRIPTION
1/13/00	2	Overall Permit Set
11/15/99	1	Progress Set
10/18/99	1	Progress Set

REVISIONS

DRAWN BY
JDO

CHECKED BY
LEJ

Parking Garage
City of Stockton, California
FOUNDATION RE-DESIGN SET

DRAWING
COLUMN SCHEDULE AND PILECAPS

PROJECT NO. 98113
DRAWING NO. S3.02G
CADFILE S3_02.dwg
DATE 24 SEPTEMBER 1999

F:\98113\S300\Grid\S3_02.dwg 01/17/00 13:33 96 Mark A. R.

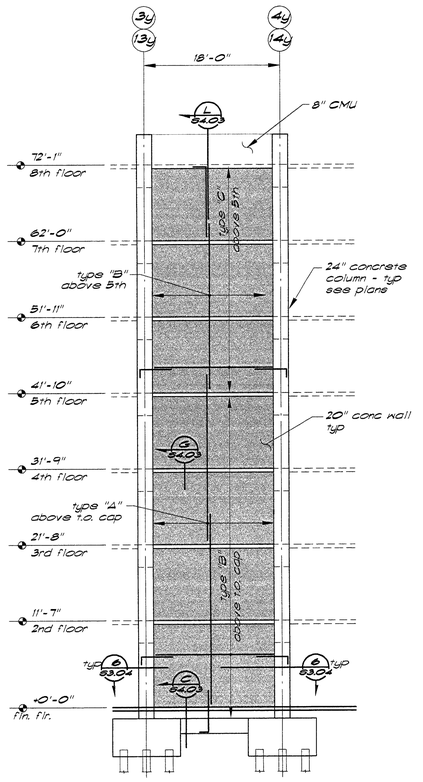

Note: Shading indicates 30 day delay shotcrete placing after post-tensioning of floor level above wall.

Elevation 1/S3.03 — 1/8"=1'-0"

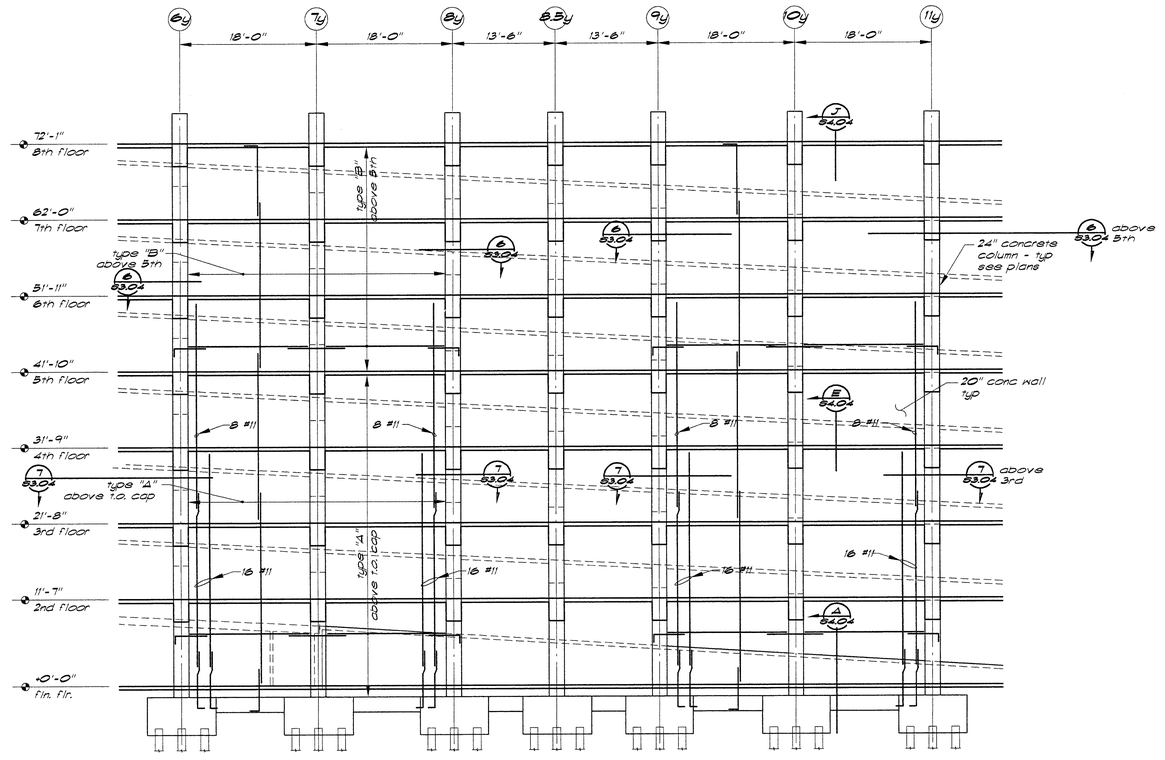

Note: Shading indicates 30 day delay shotcrete placing after post-tensioning of floor level above wall.

Elevation 2/S3.03 — 1/8"=1'-0"

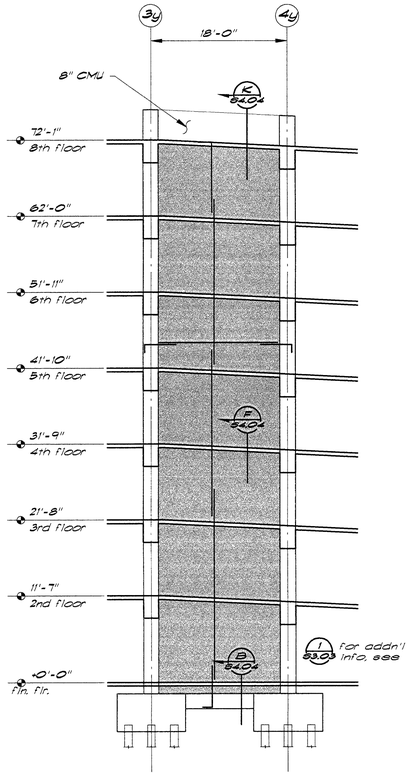

Note: Shading indicates 30 day delay shotcrete placing after post-tensioning of floor level above wall.

Elevation 3/S3.03 — 1/8"=1'-0"

Grade Beam Reinforcing Schedule

4/S3.03

Mk.	Width	Depth	Top Reinf (Interior)	Bottom Reinf	Ties	Tie Shape
GGB-1	16"	16"	2 - #8	2 - #8	#4 @ 12"cc	
GGB-2	18"	18"	2 - #9	2 - #9	#4 @ 12"cc	
GGB-3	24"	24"	3 - #11	5 - #11	#5 @ 12"cc	
GGB-4	36"	24"	4 - #11	6 - #11	2-#5 @ 12"cc	
GGB-5	48"	36"	10 - #11	10 - #11	2- #5 @ 12"cc	
GGB-6	60"	36"	12 - #11	12 - #11	2- #5 @ 12"cc	

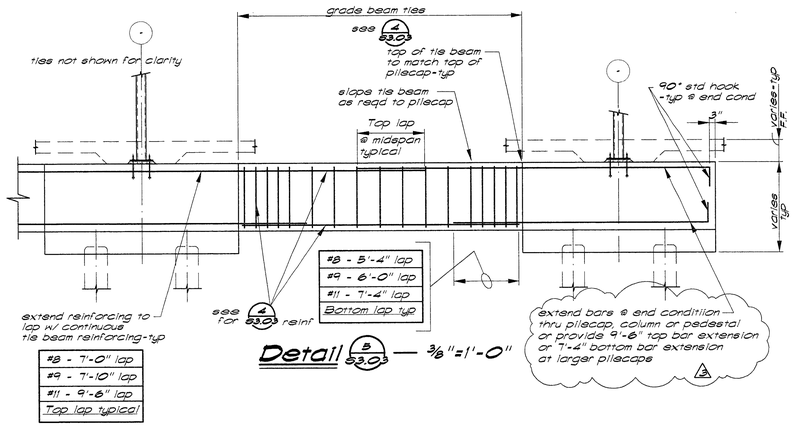

Detail 5/S3.03 — 3/8"=1'-0"

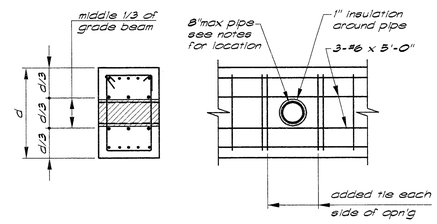

Notes:

1. 8"ø maximum single pipe penetrations with 1" insulation or PVC sleeve with ½" clear.
2. Multiple openings to be spaced no closer than 2d center to center.
3. Locate openings in middle 1/3 of grade beam span and in middle 1/3 of grade beam depth.

Typical Grade Beam & Conduit Penetration Detail 6/S3.03 — ½"=1'-0"

This set of plans and specifications is void unless signed and dated by the Building Official. Permits issued on the basis of these plans and specifications do not permit any violation of any City ordinance or State law. Occupancy of structure not permitted until after final approval.

JOB SITE COPY

PLANS REVIEWED BY
Precision Inspection Company
Inspection and Consulting Services

Page 38 Of 79

ENGLISH HARPER RETA
ARCHITECTS

580 UNIVERSITY AVENUE SUITE 100
SACRAMENTO, CA 95825 (916) 568-1821

THIS DRAWING IS NOT FINAL OR TO BE USED FOR CONSTRUCTION UNTIL IT IS SIGNED BY THE ARCHITECT AND THE OWNER.

ARCHITECT
EDWARD P. ENGLISH C-10399
RICHARD L. HARPER C-13830
RONALD A. RETA C- 9879

OWNER

CONTRACTOR

LICENSED ARCHITECT RICHARD L. HARPER No. C-13830 REN. 3-31- STATE OF CALIFORNIA

Turner Construction Company

BUEHLER & BUEHLER ASSOCIATES
STRUCTURAL ENGINEERS, INC.
7300 Folsom Blvd., Suite 103
Sacramento, Ca. 95826
(916) 381-8181

REGISTERED PROFESSIONAL ENGINEER LAWRENCE E. JONES No. SE 3138 Exp. 12/31/01 STRUCTURAL STATE OF CALIFORNIA

Essential Services Facility (UNDER SEPARATE DOCUMENT PACKAGE)

Parking Garage

KEY PLAN

DATE	NO.	DESCRIPTION
1/13/00	2	Overall Permit Set
11/15/99	2	Progress Set
10/18/99	1	Progress Set

REVISIONS

DRAWN BY
HLC

CHECKED BY
LEJ

Parking Garage
City of Stockton, California
FOUNDATION RE-DESIGN SET

DRAWING
WALL ELEVATIONS
-
-

PROJECT NO. 98113
DRAWING NO. S3.03G
CADFILE S3_03.dwg
DATE 07 SEPTEMBER 1999

I:\98000\CONDesign\S3_03.dwg 01/17/00 12:00:56 Mark A. R.

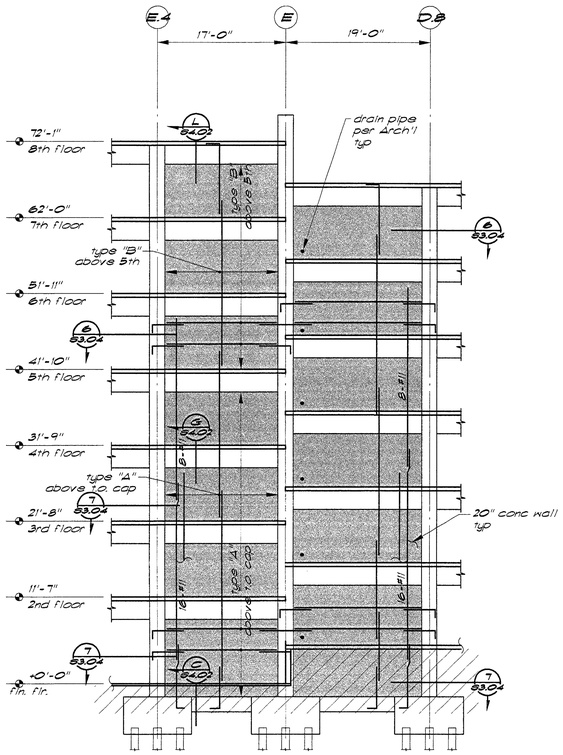

Note: Shading indicates 30 day delay shotcrete placing after post-tensioning of floor level above wall.

Elevation 1/S3.04 — 1/8"=1'-0"

Wall Reinforcing Schedule (A/S3.04)

Type	horiz.	vert.
A	#7 @ 10" cc 2 curtain	#6 @ 12" cc 2 curtain
B	#6 @ 11" cc 2 curtain	#5 @ 12" cc 2 curtain
C	#5 @ 12" cc 2 curtain	#5 @ 16" cc 2 curtain

Notes:
1. Use 4000 psi min 28 day strength for concrete shear walls typ.
2. Lap wall reinf. 58 @ typ.
3. Mechanical couplers may be used in lieu of lap splices. Couplers must develop the lesser of 160% of the yield strength of the rebar or 95% of the ultimate strength of the rebar.
4. Rebar must conform to ASTM A706 or may be ASTM A615 per A/S3.04 note 4.

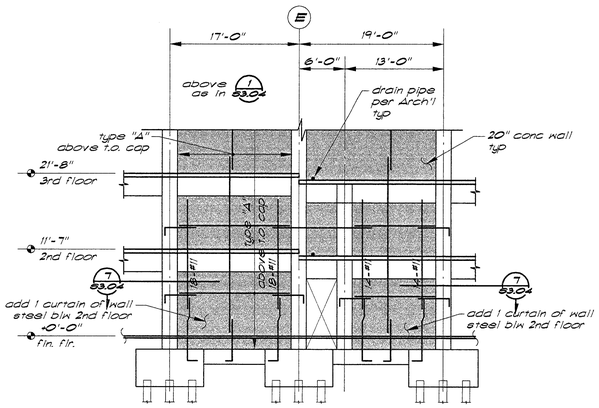

Note: Shading indicates 30 day delay shotcrete placing after post-tensioning of floor level above wall.

Elevation 2/S3.04 — 1/8"=1'-0"

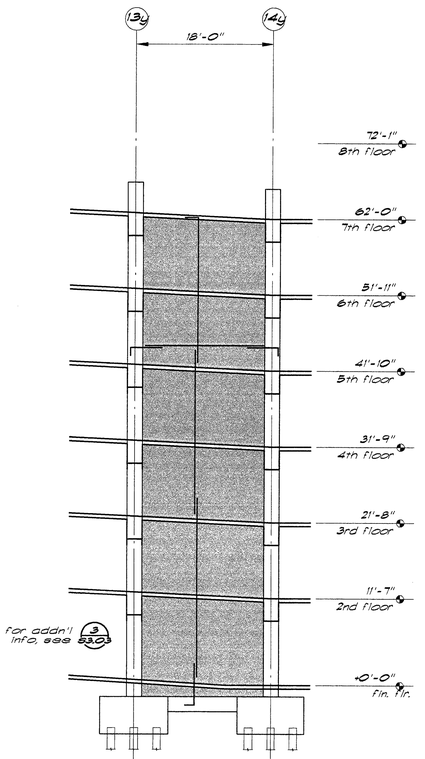

Note: Shading indicates 30 day delay shotcrete placing after post-tensioning of floor level above wall.

Elevation 3/S3.04 — 1/8"=1'-0"

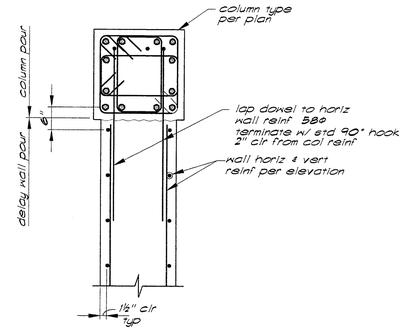

Detail 6/S3.04 — 3/4"=1'-0"

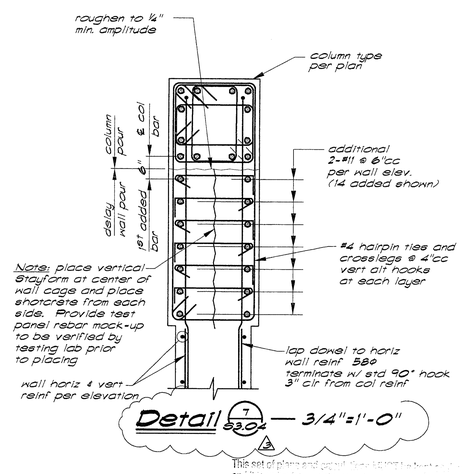

Detail 7/S3.04 — 3/4"=1'-0"

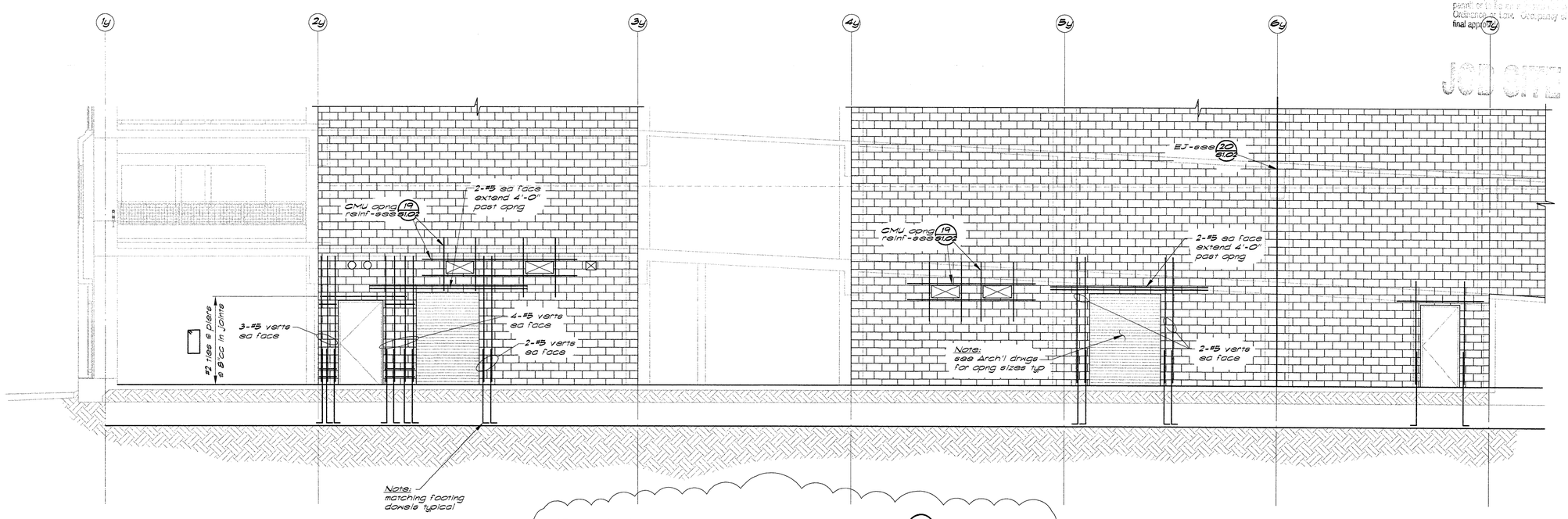

Block Wall Elevation @ Line C/D 8/S3.04 — ¼"=1'-0"

PLANS REVIEWED BY
Precision Inspection Company
Inspection and Consulting Services

Page 39 of 99

This set of plans and detail [illegible] and is not to be used for any other work. It is the property of the Architect and the Owner. [illegible] Ordinance of the City of Stockton. Occupancy of a building not permitted until after final approval.

JOB SITE COPY

ENGLISH HARPER RETA
ARCHITECTS

580 UNIVERSITY AVENUE SUITE 100
SACRAMENTO, CA 95825 (916) 568-1821

THIS DRAWING IS NOT FINAL OR TO BE USED FOR CONSTRUCTION UNTIL IT IS SIGNED BY THE ARCHITECT AND THE OWNER.

ARCHITECT
EDWARD P. ENGLISH C-10399
RICHARD L. HARPER C-13830
RONALD A. RETA C- 9879

OWNER

CONTRACTOR

LICENSED ARCHITECT RICHARD L. HARPER No. 13830 REN. 3-31- STATE OF CALIFORNIA

Turner Construction Company

BUEHLER & BUEHLER ASSOCIATES
STRUCTURAL ENGINEERS, INC.
7300 Folsom Blvd., Suite 103
Sacramento, Ca. 95826
(916) 381-8181

REGISTERED PROFESSIONAL ENGINEER LAWRENCE E. JONES No. SE 3138 Exp. 12/31/01 STRUCTURAL STATE OF CALIFORNIA

Essential Services Facility (UNDER SEPARATE DOCUMENT PACKAGE)

Parking Garage

KEY PLAN

DATE	NO.	DESCRIPTION
1/13/00	2	Overall Permit Set
11/15/99	2	Progress Set
10/18/99	1	Progress Set

REVISIONS

DRAWN BY
JDO

CHECKED BY
LEJ

Parking Garage
City of Stockton, California
FOUNDATION RE-DESIGN SET

DRAWING
WALL ELEVATIONS
-
-

PROJECT NO. 98113
DRAWING NO. S3.04G
CADFILE S3_04.dwg
DATE 07 SEPTEMBER 1999

P:\1998\8801\Garage\S3_04.dwg 01/17/00 12:33:56 Mark A. R.

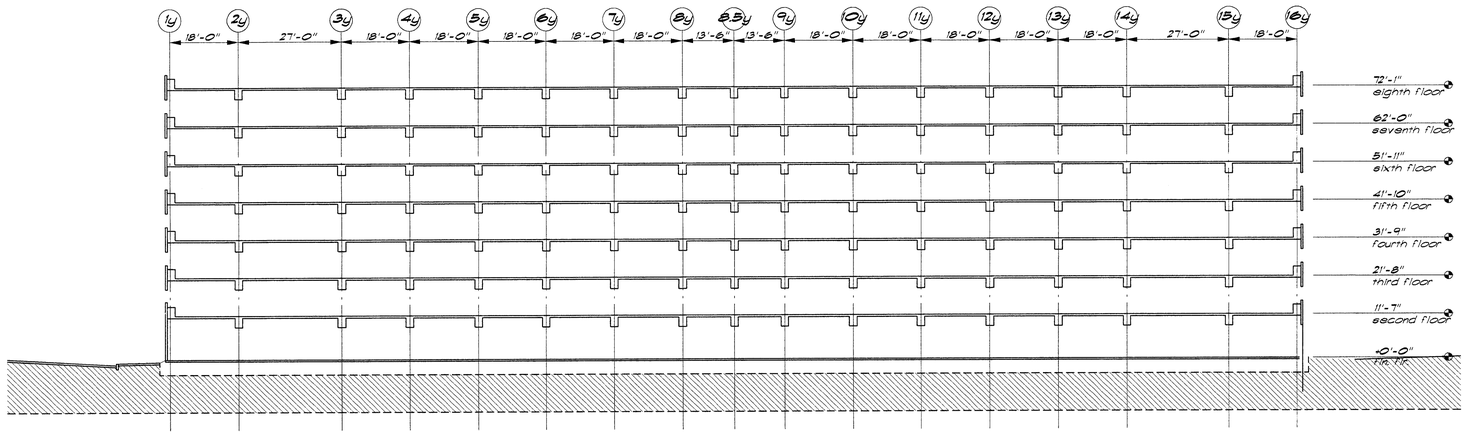

Section 4/S4.01 — 1/16"=1'-0"

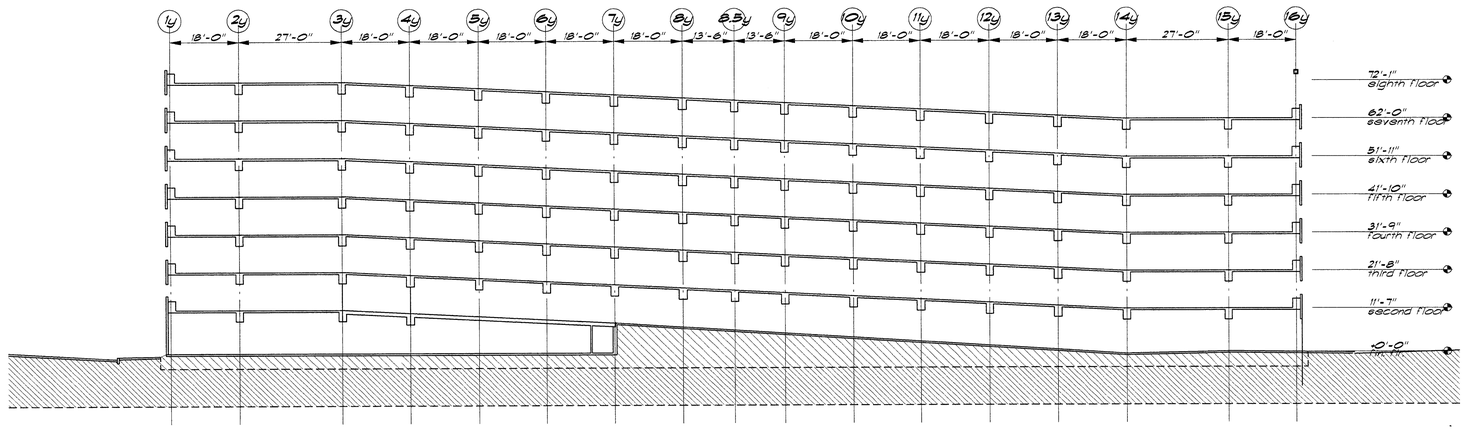

Section 3/S4.01 — 1/16"=1'-0"

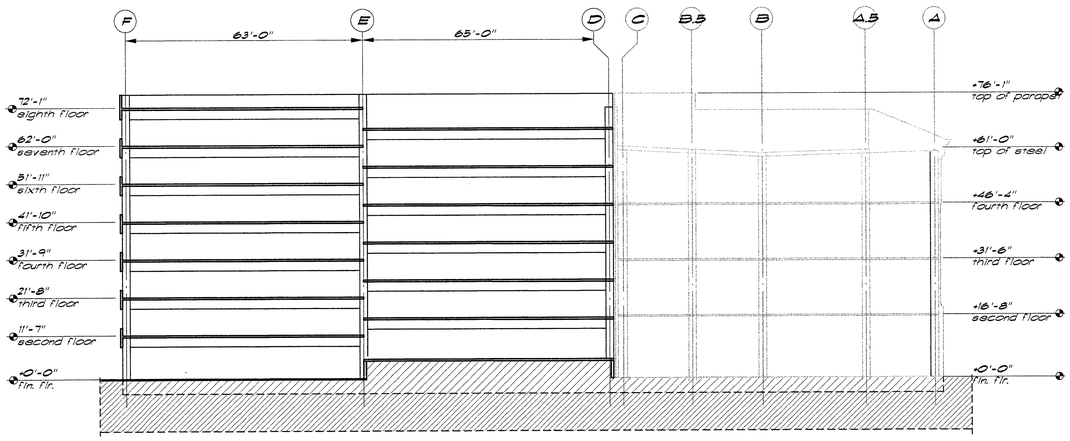

Section 5/S4.01 — 1/16"=1'-0"

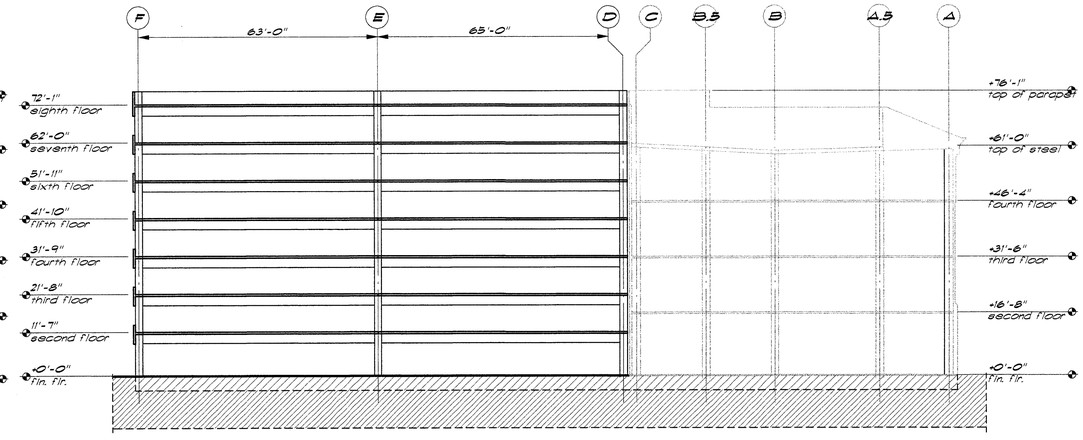

Section 2/S4.01 — 1/16"=1'-0"

This set of plans and specifications is copyrighted and is the property of the Architect and may not be used in whole or in part by any person or entity without the written permission of the Architect.

This drawing is not final or to be used for construction until it is signed by the Architect and the Owner. Occupancy or utilization not permitted until after final approval.

JOB SITE COPY

ENGLISH HARPER RETA
ARCHITECTS

580 UNIVERSITY AVENUE SUITE 100
SACRAMENTO, CA 95825 (916) 568-1821

THIS DRAWING IS NOT FINAL OR TO BE USED FOR CONSTRUCTION UNTIL IT IS SIGNED BY THE ARCHITECT AND THE OWNER.

ARCHITECT
EDWARD P. ENGLISH C-10399
RICHARD L. HARPER C-13830
RONALD A. RETA C- 9879

OWNER

CONTRACTOR

LICENSED ARCHITECT EDWARD P. ENGLISH RENEWAL 31 C-10399 SEN. 3-31 STATE OF CALIFORNIA

Turner Construction Company

BUEHLER & BUEHLER ASSOCIATES
STRUCTURAL ENGINEERS, INC.
7300 Folsom Blvd., Suite 103
Sacramento, Ca. 95826
(916) 381-8181

REGISTERED PROFESSIONAL ENGINEER T. LAWRENCE JONES No. SE 3138 Exp. 12/31/01 STRUCTURAL STATE OF CALIFORNIA

Essential Services Facility
(UNDER SEPARATE DOCUMENT PACKAGE)

Parking Garage

KEY PLAN

DATE	NO.	DESCRIPTION
1/13/00	3	Overall Permit Set
11/15/99	2	Progress Set
10/18/99	1	Progress Set

REVISIONS
DRAWN BY MAR
CHECKED BY LEJ

Parking Garage
City of Stockton, California
FOUNDATION RE-DESIGN SET

DRAWING
SECTIONS
-
-

PROJECT NO. 98113
CADFILE S4_01.dwg
DATE 07 SEPTEMBER 1999

DRAWING NO. S4.01G

PLANS REVIEWED BY Precision Inspection Company Inspection and Consulting Services
Page 40 of 119

F:\1998\2000\Garage\S4_01.dwg 01/11/00 17:58 BE Mark A. R.

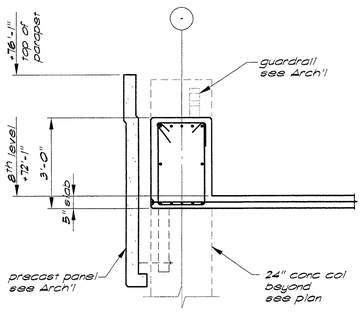

Section N S4.02 — ½"=1'-0"

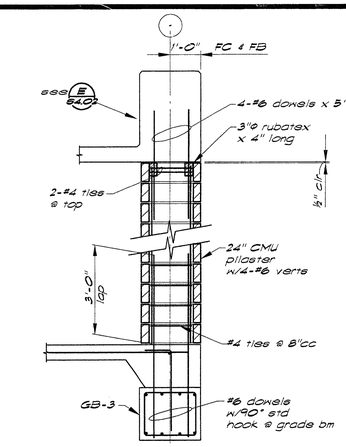

Section P S4.02 — ½"=1'-0"

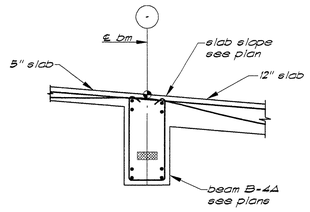

Section Q S4.02 — ½"=1'-0"

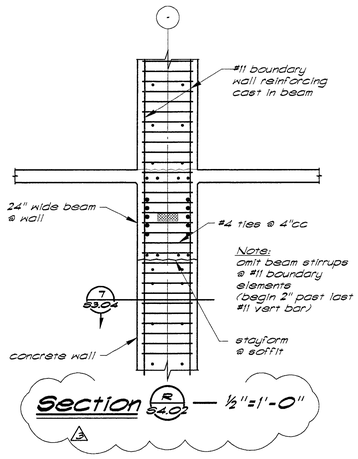

Section R S4.02 — ½"=1'-0"

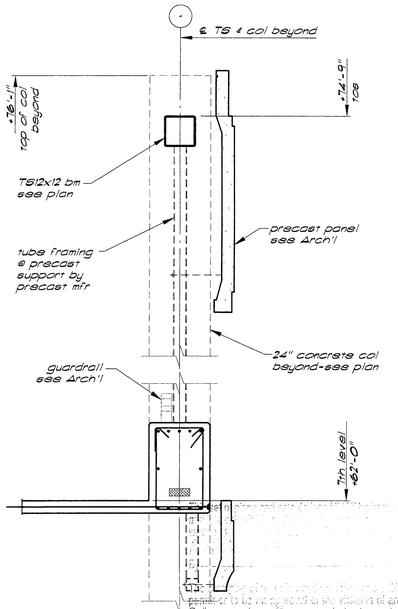

Section M S4.02 — ½"=1'-0"

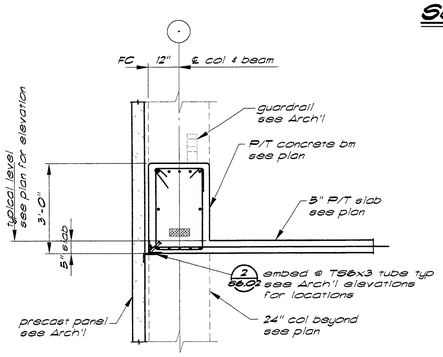

Section J S4.02 — ½"=1'-0"

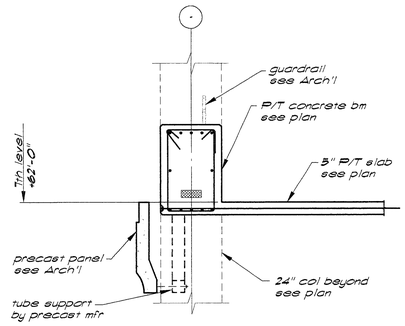

Section K S4.02 — ½"=1'-0"

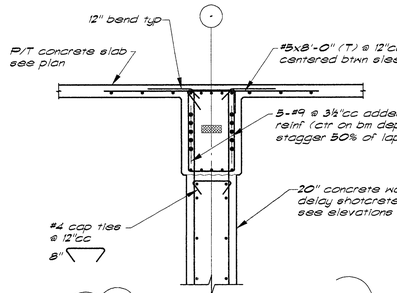

Section L S4.02 — ½"=1'-0"

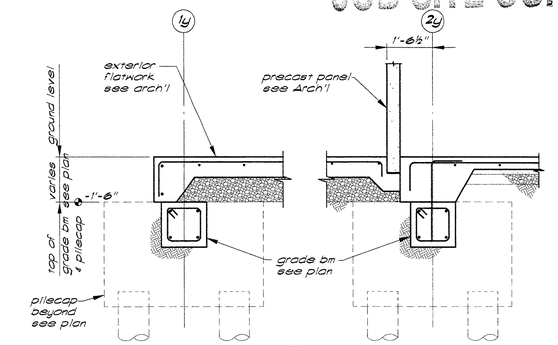

Section H S4.02 — ½"=1'-0"

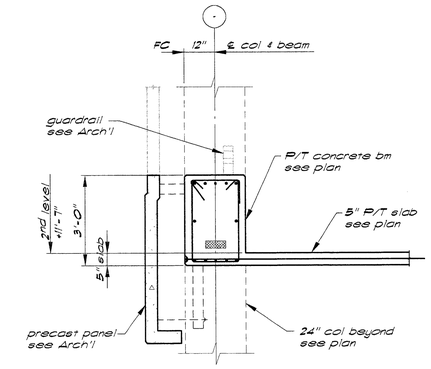

Section E S4.02 — ½"=1'-0"

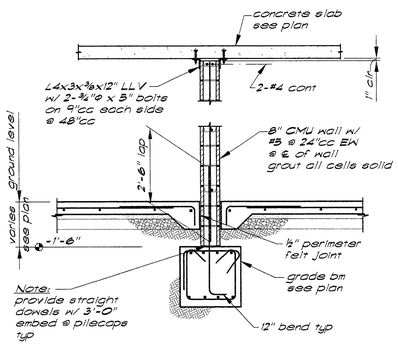

Section F S4.02 — ½"=1'-0"

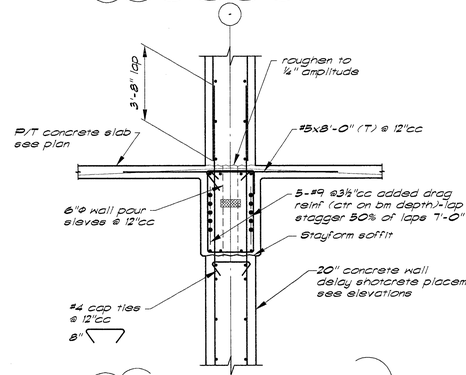

Section G S4.02 — ½"=1'-0"

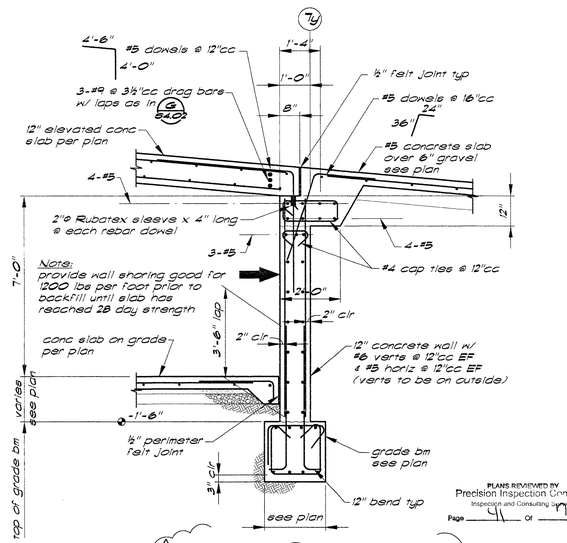

Section D S4.02 — ½"=1'-0"

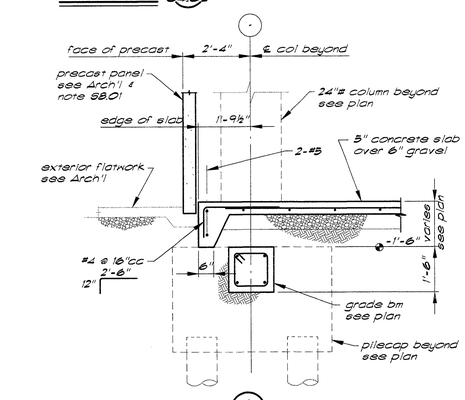

Section A S4.02 — ½"=1'-0"

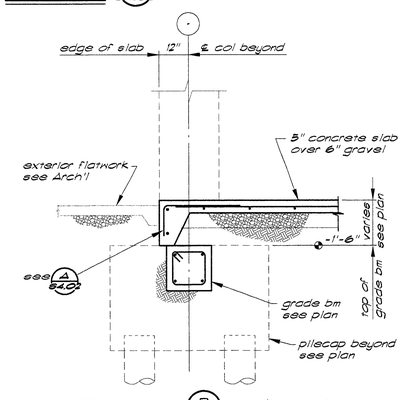

Section B S4.02 — ½"=1'-0"

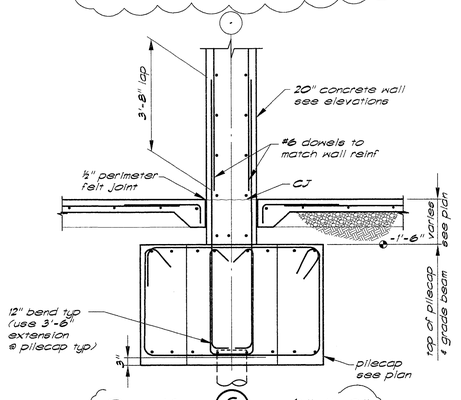

Section C S4.02 — ½"=1'-0"

ENGLISH HARPER RETA
ARCHITECTS

580 UNIVERSITY AVENUE SUITE 100
SACRAMENTO, CA 95825 (916) 568-1821

THIS DRAWING IS NOT FINAL OR TO BE USED FOR CONSTRUCTION UNTIL IT IS SIGNED BY THE ARCHITECT AND THE OWNER.

ARCHITECT
EDWARD P. ENGLISH C-10399
RICHARD L. HARPER C-13830
RONALD A. RETA C- 9879

OWNER

CONTRACTOR

REGISTERED ARCHITECT RICHARD L. HARPER REN. 3-31- STATE OF CALIFORNIA

Turner Construction Company

BUEHLER & BUEHLER ASSOCIATES
STRUCTURAL ENGINEERS, INC.
7300 Folsom Blvd., Suite 103
Sacramento, Ca. 95826
(916) 381-8181

REGISTERED PROFESSIONAL ENGINEER LAWRENCE E. JONES No. SE 3138 Exp. 12/31/01 STRUCTURAL STATE OF CALIFORNIA

Ordinance or Law. Occupancy of structure not permitted until after final approval.

JOB SITE COPY

Essential Services Facility (UNDER SEPARATE DOCUMENT PACKAGE)

Parking Garage

KEY PLAN

DATE	NO.	DESCRIPTION
1/13/00	3	Overall Permit Set
11/15/99	2	Progress Set
10/18/99	1	Progress Set

REVISIONS

DRAWN BY
MAR

CHECKED BY
LEJ

Parking Garage
City of Stockton, California
FOUNDATION RE-DESIGN SET

DRAWING
SECTIONS
-
-

PLANS REVIEWED BY Precision Inspection Company Inspection and Consulting Services Page 41 Of 79

PROJECT NO. 98113

DRAWING NO. S4.02G

CADFILE S4_02.dwg

DATE 07 SEPTEMBER 1999

F:\98981\CAD\Concept\S4_02.dwg 01/12/00 11:46 BE Mark A. R.

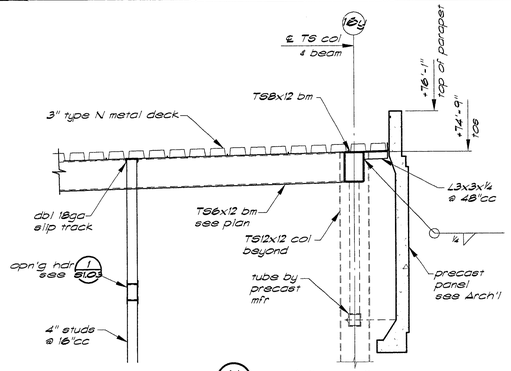

Section N S4.03 — ½"=1'-0"

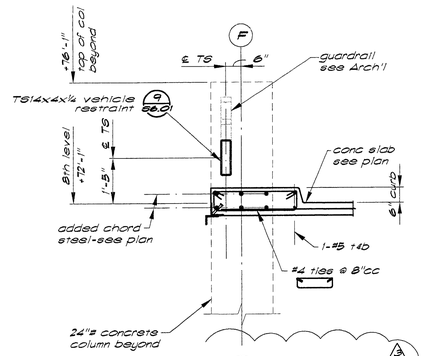

Section P S4.03 — ½"=1'-0"

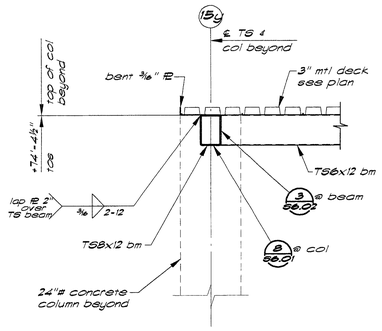

Section Q S4.03 — ½"=1'-0"

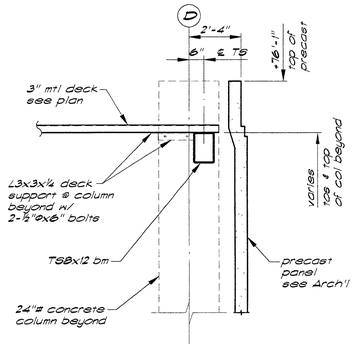

Section R S4.03 — ½"=1'-0"

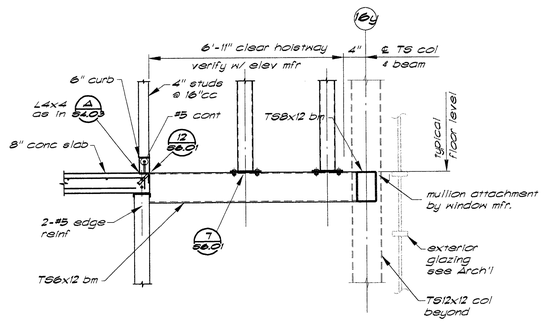

Section J S4.03 — ½"=1'-0"

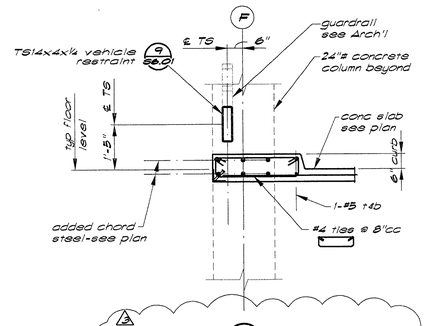

Section K S4.03 — ½"=1'-0"

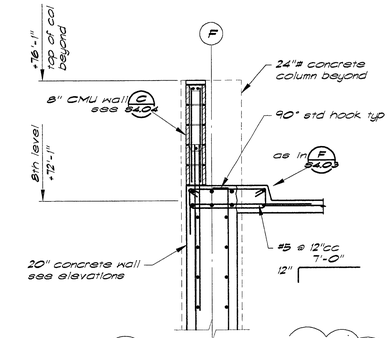

Section L S4.03 — ½"=1'-0"

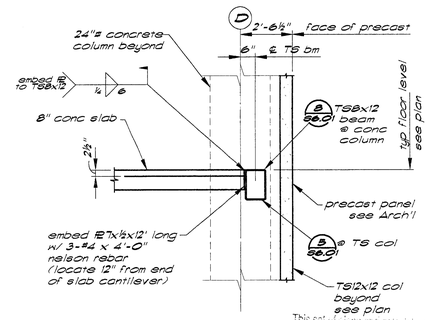

Section M S4.03 — ½"=1'-0"

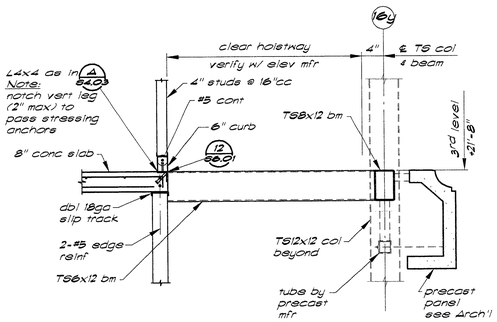

Section E S4.03 — ½"=1'-0"

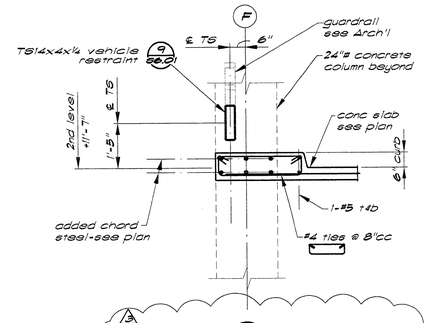

Section F S4.03 — ½"=1'-0"

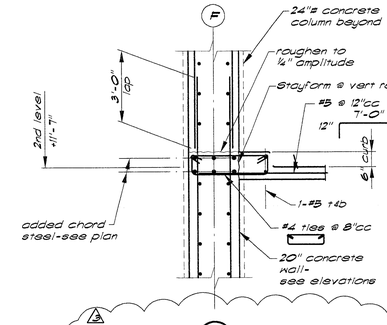

Section G S4.03 — ½"=1'-0"

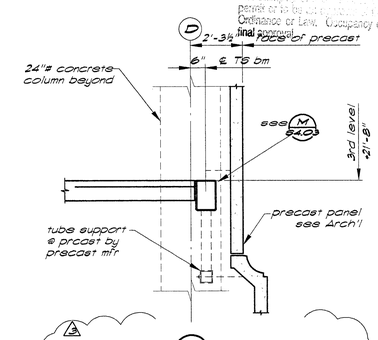

Section H S4.03 — ½"=1'-0"

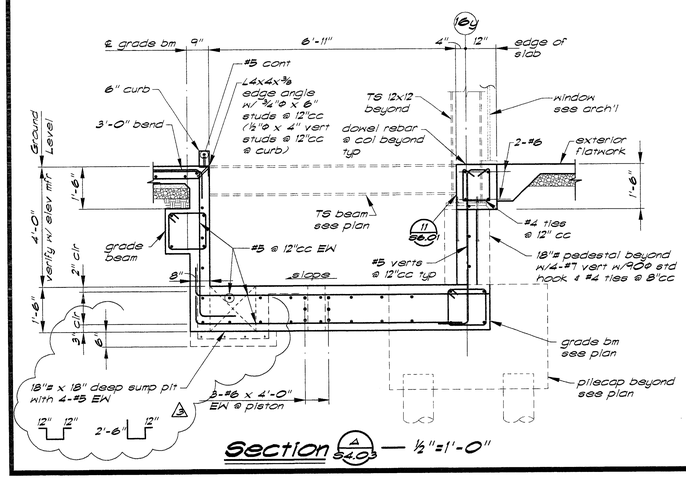

Section A S4.03 — ½"=1'-0"

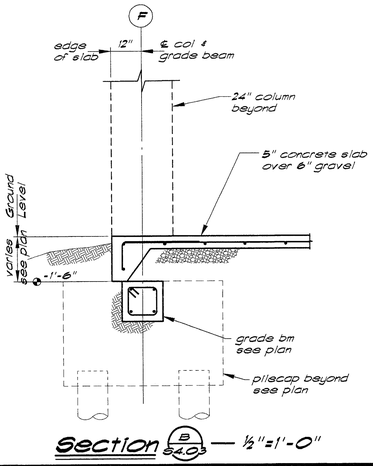

Section B S4.03 — ½"=1'-0"

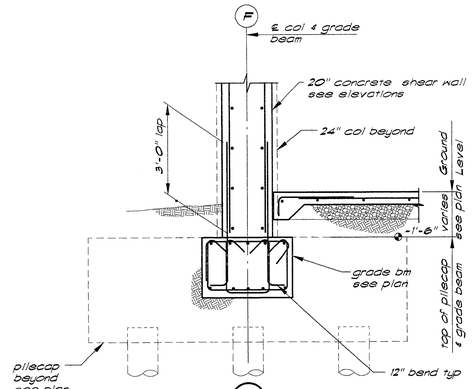

Section C S4.03 — ½"=1'-0"

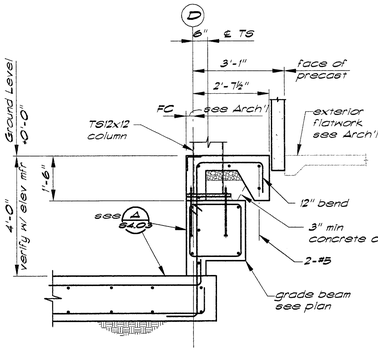

Section D S4.03 — ½"=1'-0"

PLANS REVIEWED BY
Precision Inspection Company
Inspection and Consulting Services
Page 42 of 119

This set of plans and specifications must be kept on the premises of the building, structure or work at all times during which the same is in progress. Violation of any provisions of any Ordinance or Law. Occupancy of structure or use of premises shall not be permitted until after final approval.

JOB SITE COPY

Essential Services Facility
(UNDER SEPARATE DOCUMENT PACKAGE)

Parking Garage

KEY PLAN

ENGLISH HARPER RETA
ARCHITECTS

580 UNIVERSITY AVENUE SUITE 100
SACRAMENTO, CA 95825 (916) 568-1821

THIS DRAWING IS NOT FINAL OR TO BE USED FOR CONSTRUCTION UNTIL IT IS SIGNED BY THE ARCHITECT AND THE OWNER.

ARCHITECT
EDWARD P. ENGLISH C-10399
RICHARD L. HARPER C-13830
RONALD A. RETA C- 9879

OWNER

CONTRACTOR

REGISTERED PROFESSIONAL ENGINEER RONALD A. RETA No. 3131 EXP. 3-31- STATE OF CALIFORNIA

Turner Construction Company

BUEHLER & BUEHLER ASSOCIATES
STRUCTURAL ENGINEERS, INC.
7300 Folsom Blvd., Suite 103
Sacramento, Ca. 95826
(916) 381-8181

REGISTERED PROFESSIONAL ENGINEER LAWRENCE E. JONES No. SE 3138 Exp. 12/31/01 STRUCTURAL STATE OF CALIFORNIA

DATE	NO.	DESCRIPTION
1/13/00	3	Overall Permit Set
11/15/99	2	Progress Set
10/18/99	1	Progress Set

REVISIONS

DRAWN BY
MAR

CHECKED BY
LEJ

Parking Garage
City of Stockton, California
FOUNDATION RE-DESIGN SET

DRAWING
SECTIONS
-
-

PROJECT NO. 98113
DRAWING NO. S4.03G
CADFILE S4_03.dwg
DATE 07 SEPTEMBER 1999

F:\1998\98200\Group\S4_03.dwg 01/11/00 17:13 98 Mark A. R.

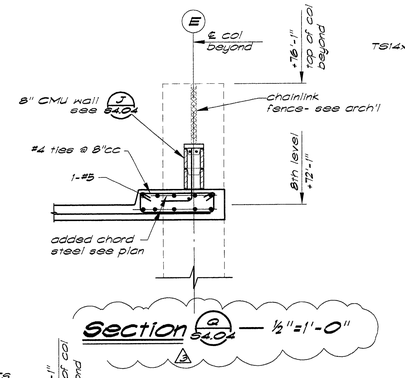

Section G S4.04 — ½"=1'-0"

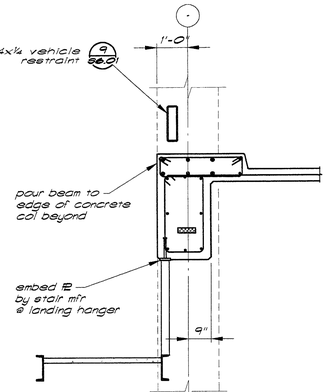

Section R S4.04 — ½"=1'-0"

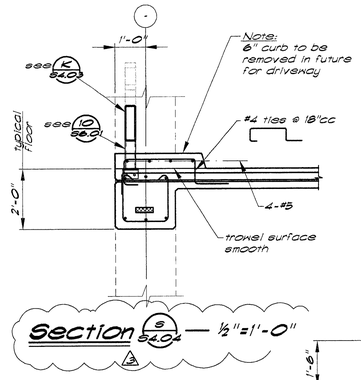

Section S S4.04 — ½"=1'-0"

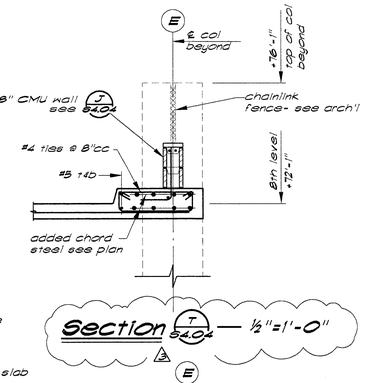

Section T S4.04 — ½"=1'-0"

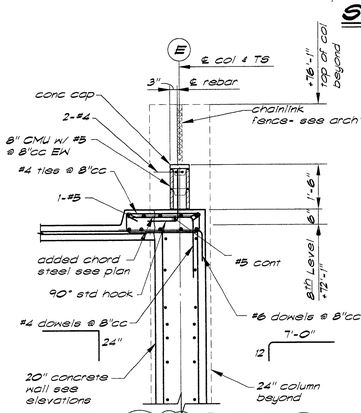

Section J S4.04 — ½"=1'-0"

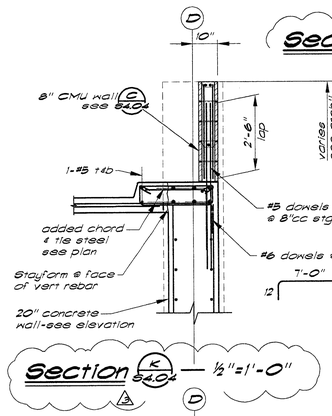

Section K S4.04 — ½"=1'-0"

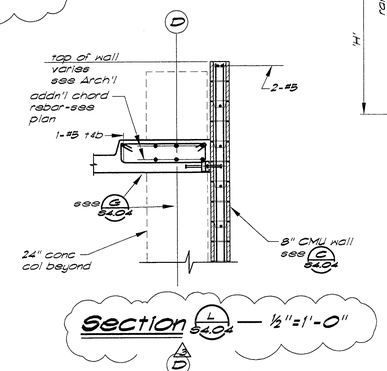

Section L S4.04 — ½"=1'-0"

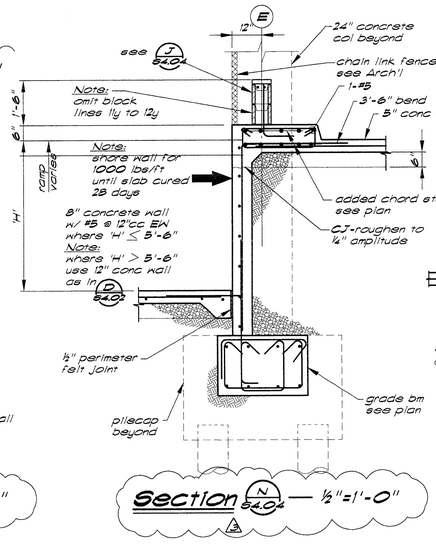

Section N S4.04 — ½"=1'-0"

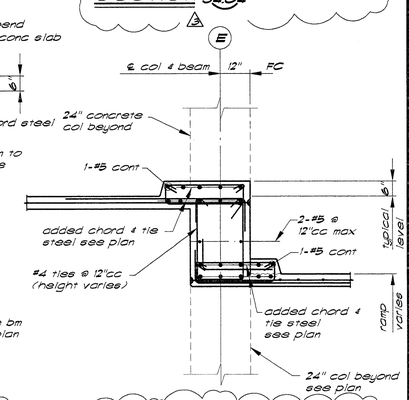

Section P S4.04 — ½"=1'-0"

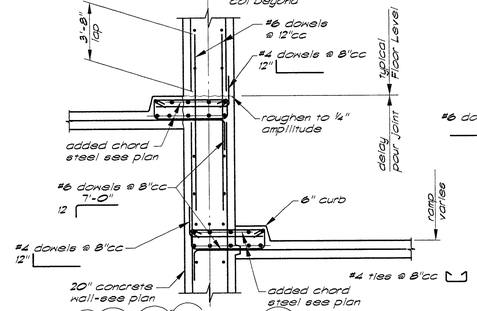

Section E S4.04 — ½"=1'-0"

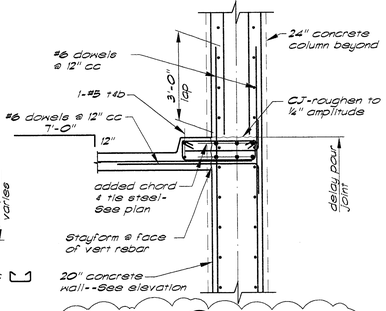

Section F S4.04 — ½"=1'-0"

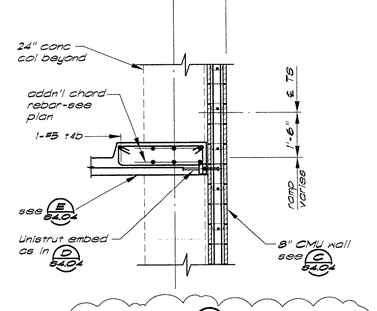

Section G S4.04 — ½"=1'-0"

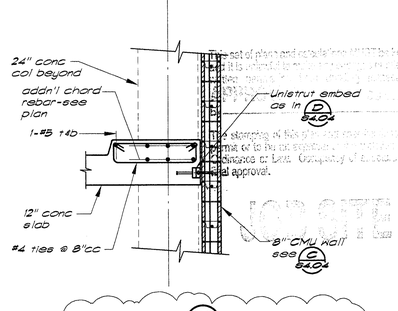

Section H S4.04 — ½"=1'-0"

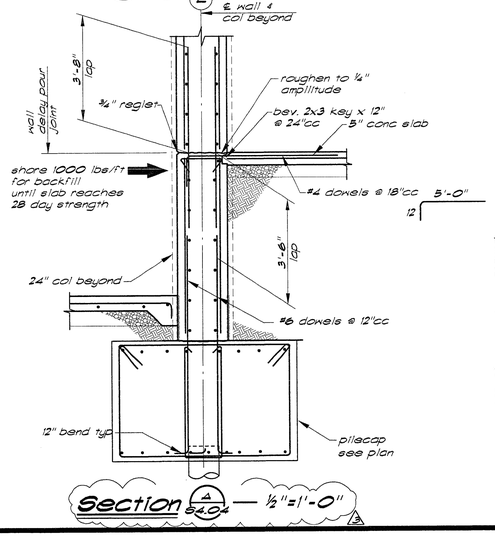

Section A S4.04 — ½"=1'-0"

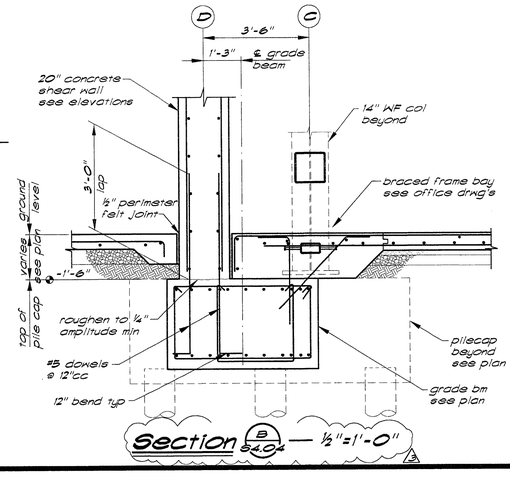

Section B S4.04 — ½"=1'-0"

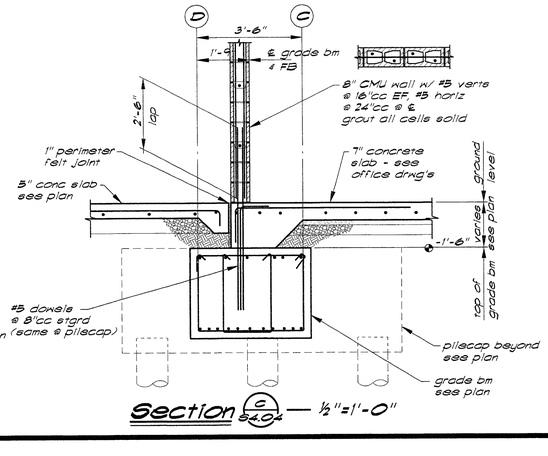

Section C S4.04 — ½"=1'-0"

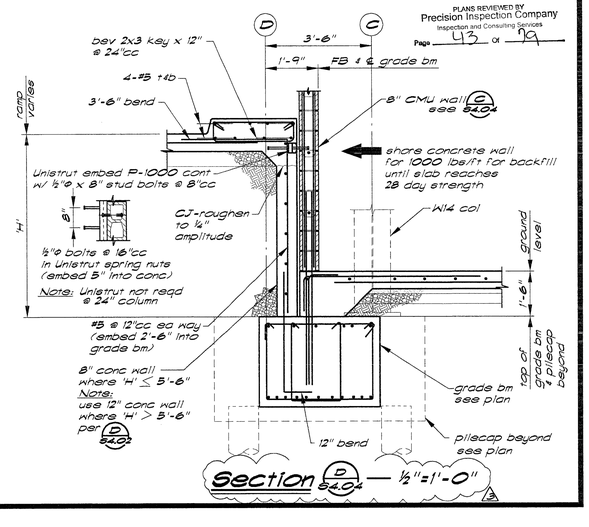

Section D S4.04 — ½"=1'-0"

PLANS REVIEWED BY Precision Inspection Company
Inspection and Consulting Services
Page 43 Of 99

ENGLISH HARPER RETA
ARCHITECTS

580 UNIVERSITY AVENUE SUITE 100
SACRAMENTO, CA 95825 (916) 568-1821

THIS DRAWING IS NOT FINAL OR TO BE USED FOR CONSTRUCTION UNTIL IT IS SIGNED BY THE ARCHITECT AND THE OWNER.

ARCHITECT
EDWARD P. ENGLISH C-10399
RICHARD L. HARPER C-13830
RONALD A. RETA C- 9879

OWNER

CONTRACTOR

Turner Construction Company

BUEHLER & BUEHLER ASSOCIATES
STRUCTURAL ENGINEERS, INC.
7300 Folsom Blvd., Suite 103
Sacramento, Ca. 95826
(916) 381-8181

REGISTERED PROFESSIONAL ENGINEER LAWRENCE E. JONES No. SE 3138 Exp. 12/31/01 STRUCTURAL STATE OF CALIFORNIA

Record set of plans and specifications. Use of these documents on any project is prohibited unless written permission or license is obtained from the Architect. Copyright of these documents is reserved by the Architect. Visual contact with these documents shall constitute prima facie evidence of acceptance of these restrictions. Written dimensions shall have precedence over scaled dimensions. Contractor shall verify and be responsible for all dimensions and conditions on the job. This office must be notified of any variations from the dimensions and conditions shown by these plans and related documents prior to proceeding with any work. Submission or delivery of these documents in any form or medium to any party other than as stated above does not constitute publication and is expressly limited to the purposes and uses as stated above without the written consent of the Architect. Visual contact with these documents shall constitute prima facie evidence of acceptance of these restrictions.

FOR SITE COPY

Essential Services Facility (UNDER SEPARATE DOCUMENT PACKAGE)

Parking Garage

KEY PLAN

DATE	NO.	DESCRIPTION
1/13/00	2	Overall Permit Set
11/15/99	2	Progress Set
10/18/99	1	Progress Set

REVISIONS

DRAWN BY
MAR

CHECKED BY
LEJ

Parking Garage
City of Stockton, California
FOUNDATION RE-DESIGN SET

DRAWING
SECTIONS
-
-

PROJECT NO. 98113
DRAWING NO. S4.04G
CADFILE S4_04.dwg
DATE 07 SEPTEMBER 1999

F:\99\98113\Comp\S4_04.dwg 01/17/00 12:59 96 Mark A. R.

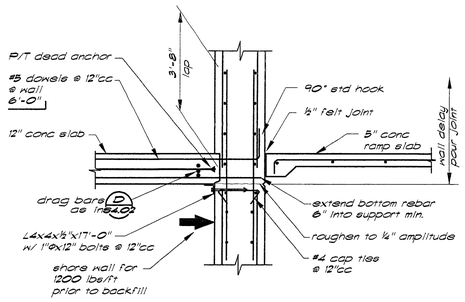

Section A/S4.05 — ½"=1'-0"

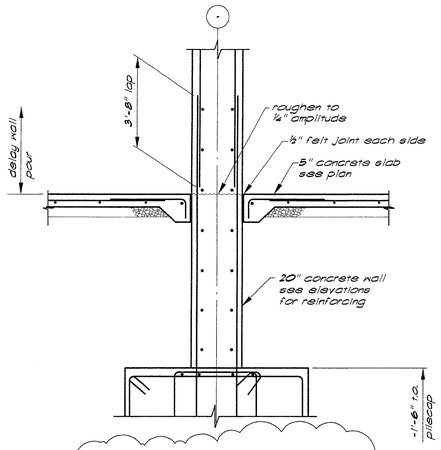

Section B/S4.05 — ½"=1'-0"

JOB SITE COPY

PLANS REVIEWED BY
Precision Inspection Company
Inspection and Consulting Services
Page 44 of 79

ENGLISH HARPER RETA
ARCHITECTS

580 UNIVERSITY AVENUE
SACRAMENTO, CA 95825
SUITE 100
(916) 568-1821

THIS DRAWING IS NOT FINAL OR TO BE USED FOR CONSTRUCTION UNTIL IT IS SIGNED BY THE ARCHITECT AND THE OWNER.

ARCHITECT
EDWARD P. ENGLISH C-10399
RICHARD L. HARPER C-13830
RONALD A. RETA C- 9879

OWNER

CONTRACTOR

Turner
Construction Company

BUEHLER & BUEHLER ASSOCIATES
STRUCTURAL ENGINEERS, INC.
7300 Folsom Blvd., Suite 103
Sacramento, Ca. 95826
(916) 381-8181

KEY PLAN

DATE	NO.	DESCRIPTION
1/13/00	3	Overall Permit Set
11/15/99	2	Progress Set
10/18/99	1	Progress Set

REVISIONS

DRAWN BY
HLC

CHECKED BY
LEJ

Parking Garage
City of Stockton, California
FOUNDATION RE-DESIGN SET

DRAWING
SECTIONS
-
-

PROJECT NO. 98113
DRAWING NO. S4.05G
CADFILE S4_05.dwg
DATE 07 SEPTEMBER 1999

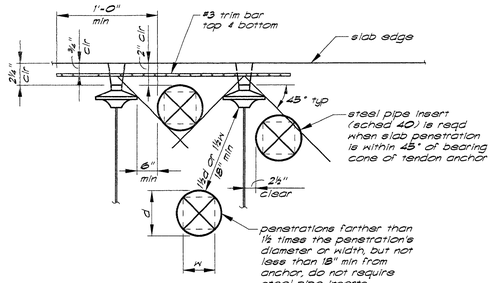

Note:
Any penetration with dimensions greater than 12" must have trim reinforcement as detail 12/S5.01

Penetrations & Tendon Anchors Detail 1/S5.01

3305665-16

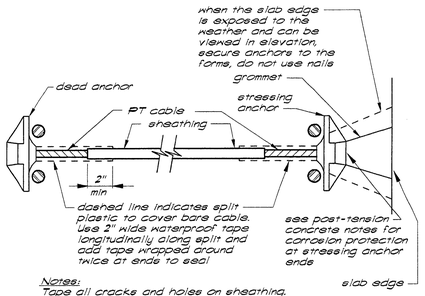

Notes:
Tape all cracks and holes on sheathing.
a) cover the tear directly with tape if the tear is less than 2".
b) for tears greater than 2" use split plastic and tape in the same manner as taping the cable anchor ends.

Corrosion Protection of Cables in Non-Corrosive Environment Detail 2/S5.01

3305672-12

Notes:
1. Stressing pocket or cont pour strip at stressing end to be determined by Contractor.
2. After stressing, strand hardware shall be coated w/ rust preventing mastic before concreting or drypacking.
3. Strands shall be adequately supported to maintain design profile.
4. Anchorage hardware must be of a type that is approved by the local governing agencies.

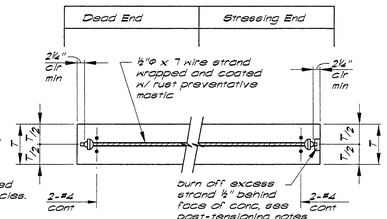

Strand Prestressing 3/S5.01

3305670-24

Note:
see plans for cge of strand

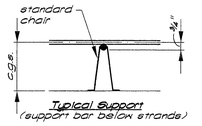

Typical Support
(support bar below strands)

Note:
see plans for cge of strand

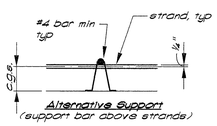

Alternative Support
(support bar above strands)

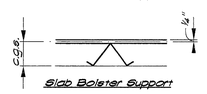

Slab Bolster Support

Note: See plans for cge of strand @ mid-span (The bolster cannot be considered a support bar as required on plan)

Detail 4/S5.01

Chairs and supports

3305668-4

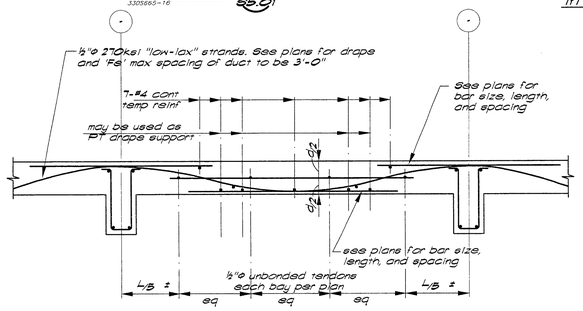

Typical Slab Reinforcing 5/S5.01

Temperature and shrinkage

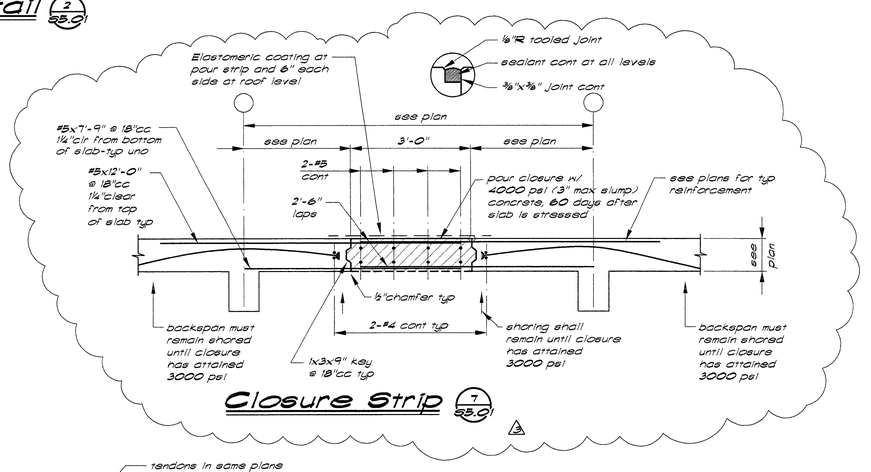

Closure Strip 7/S5.01

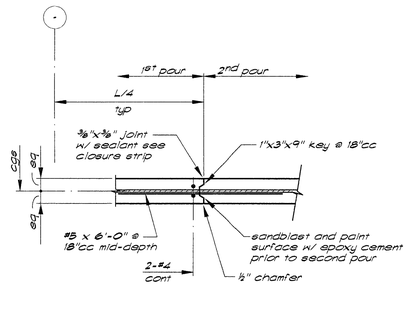

Slab Construction Joint 8/S5.01

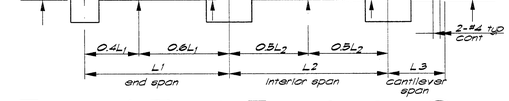

Typical Post-Tensioning Slab Profile 6/S5.01

(schematic)

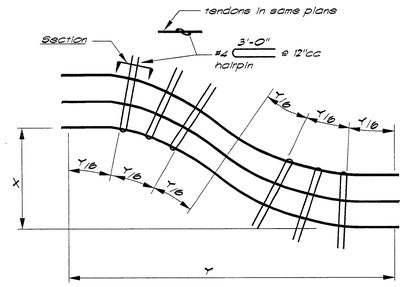

Hairpins at horizontal tendon offsets greater than 1:6 Detail 10/S5.01

3305708-12

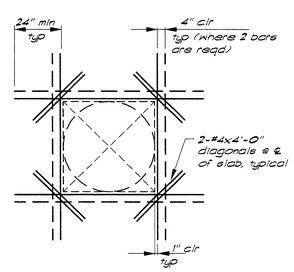

Notes:
1. All openings with a dimension of 12" or greater shall be trimmed as shown.
2. This reinf is in addition to any reinf indicated on the plans.

Max dimension	reinforcing
12" TO 18"	1-#5 ea side bott
18" TO 2'-6"	1-#5 top & bott ea side
2'-6" & 6'-0"	2-#5 top & bott ea side

Slab opening Detail 12/S5.01

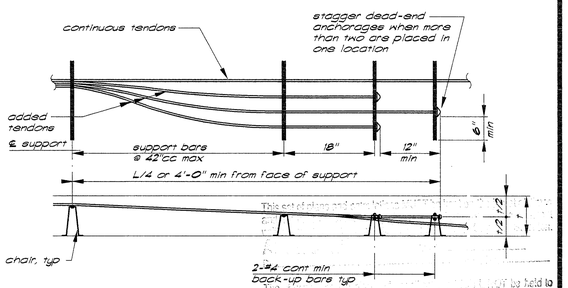

Detail 13/S5.01

Added tendon anchorages

3305668-12

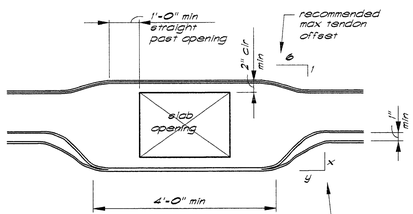

Where tendon offsets exceed 1:6 grouped tendons must be separated with minimum 1" gap.

x	1	2	3	4	5	6	7	8	9	10
y	6	12	14	16	18	20	22	24	27	30

Tendon Layout at Openings and Tendon Offset Requirements Detail 11/S5.01

3305722-24

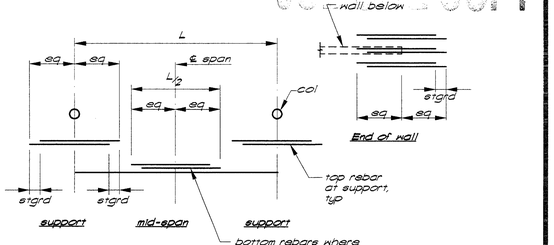

Cont and simple span

Note: Unless noted otherwise stagger all bars (all conditions) 12" unless space is insufficient in which case field adjust to less stagger.

Detail 14/S5.01

Standard Stagger

UNBONDED POST-TENSIONED CONCRETE NOTES

9/S5.01

3305652-1

1. Design is based on use of 1/2" diameter, 7 wire strand tendons, ASTM A416 Grade 270, low relaxation (f_{pu} = 270 ksi) with effective tension of 26.8 K (175 ksi) per tendon. Tendons shall be anchored at 28.9 K (189 ksi). Tendons may be stressed to 32.8 K (216 ksi) to overcome friction. Actual effective prestress tension shall be determined by loss calculations and verified by measured elongation.
2. Concrete in beams and slabs shall test not less than 4000 psi in 28 days and not less than 3000 psi at transfer of prestress. Maximum aggregate size shall be ¾".
3. Two (2) samples of each reel or heat shall be tested by an approved laboratory. Test results shall be submitted to the Structural Engineer and building department before stressing.
4. All anchorages, couplers and miscellaneous hardware shall be standard and approved by the governing agencies and the Structural Engineer.
5. Contractor shall submit friction calculations and shop drawings of tendon layout, dead end and stressing anchorage details for approval.
6. All tendons shall be securely anchored to their profile to prevent displacement during concrete placement. Support at 3'-6"c maximum. Tolerance for tendon location is a maximum of 1/4" vertical deviation for beams, 1/8" for slabs. Couplings shall be provided only where shown on the plans. Use #4 minimum support bars.
7. All tendon profiles are straight or parabolic drape and shall pass through the control point noted on plan. Control points are taken from the bottom of beam or slab and represent the highest and lowest points of the curve. See elevations for tensioning profile.
8. Prestress Subcontractor shall detail and coordinate areas of congestion or conflict with mild reinforcing, typical at anchorage locations or elsewhere. Field modifications of reinforcing shall not constitute a change order.
9. Contractor shall take precautions to assure complete consolidation and densification of concrete around all anchorages.
10. All pockets required for anchorage shall be adequately reinforced so as not to decrease the strength of the structure. Additional reinforcement at the end anchorages for bursting stresses shall be designed, detailed and supplied by the Prestress Subcontractor.
11. All pockets shall be waterproofed so as to eliminate water leakage through the pocket. After stressing, strand hardware shall be coated with rust preventive coating and blockouts shall be filled with non-shrink grout to match the color of adjacent concrete as approved by the Architect.
12. Twisting or entwining of individual wires or strands within a bundle or a beam shall not be permitted.
13. Grout or concrete containing chlorides shall not be used in the vicinity of the tendons or anchors.
14. Stressing rams shall be individually identified. Rams shall be calibrated against a known standard within three months of the beginning of stressing operations.
15. Elongation measurements shall be made at each stressing location to verify that the tendon force has been achieved. Measured elongations shall agree with calculated elongations within 5%. Stressing records of stressing gage pressures and elongations shall be kept for each stressing anchor.
16. Slight deviations in the spacing of the slab tendons will be permitted where required to avoid openings, inserts or dowels which are specifically located. Where locations of tendons seem to interfere with each other, one (1) tendon may be moved horizontally in order to avoid the interference.
17. Tendon placement and integrity of protective wrapping shall be inspected prior to placing concrete.
18. All inserts and sleeves shall be cast-in-place whenever feasible. Contractor to submit sleeve opening size and locations to Structural Engineer for approval prior to placement. Additional reinforcing around openings may be required. Edge of sleeve shall be 2" minimum clear from tendon or tendon duct.
19. Place two (2) continuous #4 bars behind edge of slab anchors.
20. If concrete is placed by pump method, saw horses shall be provided to support the hose. The hose shall not be allowed to ride on the tendons or ducts.
21. Drilled or powder driven fasteners will be permitted only with approval of the Structural Engineer and where it can be shown that the inserts will not spoil the concrete and are located so as to avoid the tendons and anchorages.
22. Do not cut off tendon ends until the entire slab or beam has been satisfactorily stressed.
23. Slabs or beams may be de-shored after all tendons have been stressed unless shoring is required to carry loads from above.
24. Continuous inspection is required for all prestress work.
25. Field Foreman: The field foreman responsible for the placement of all structural concrete shall have a minimum of three (3) years experience in this capacity for this type of construction.

ENGLISH HARPER RETA
ARCHITECTS

580 UNIVERSITY AVENUE SUITE 100
SACRAMENTO, CA 95825 (916) 568-1821

THIS DRAWING IS NOT FINAL OR TO BE USED FOR CONSTRUCTION UNTIL IT IS SIGNED BY THE ARCHITECT AND THE OWNER.

ARCHITECT
EDWARD P. ENGLISH C-10399
RICHARD L. HARPER C-13530
RONALD A. RETA C- 9879

OWNER

CONTRACTOR

LICENSED ARCHITECT EDWARD P. ENGLISH NO. C10399 RENEWAL 3-31- STATE OF CALIFORNIA

Turner Construction Company

BUEHLER & BUEHLER ASSOCIATES
STRUCTURAL ENGINEERS, INC.
7300 Folsom Blvd., Suite 103
Sacramento, Ca. 95826
(916) 381-8181

REGISTERED PROFESSIONAL ENGINEER LAWRENCE E. JONES No. SE 3138 Exp. 12/31/01 STRUCTURAL STATE OF CALIFORNIA

Essential Services Facility (UNDER SEPARATE DOCUMENT PACKAGE)

Parking Garage

KEY PLAN

DATE	NO.	DESCRIPTION
1/13/00	3	Overall Permit Set
11/15/99	2	Progress Set
10/18/99	1	Progress Set

REVISIONS
DRAWN BY HLC
CHECKED BY LEJ

Parking Garage
City of Stockton, California
FOUNDATION RE-DESIGN SET

DRAWING
SLAB POST-TENSIONING TYPICAL DETAILS
-

PROJECT NO. 98113
DRAWING NO. S5.01G
CADFILE S5_01.dwg
DATE 07 SEPTEMBER 1999

JOB SITE COPY

PLANS REVIEWED BY Precision Inspection Company
Inspection and Consulting Services
Page 45 Of

F:\98381\CAD\Comp\S5_01.dwg 01/11/00 17:15:19 Mark A. R.

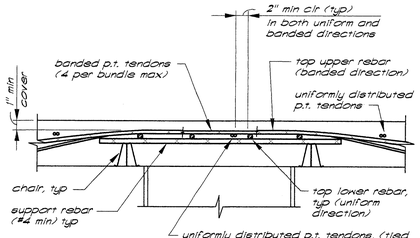

Note: Profile of banded tendons at support govern. At support uniform tendons will be placed below banded tendons, lower than the profile shown on the plans.

Tendon Layout over Column Uniformly Distributed Direction

Detail 1 / S5.02

3305715-8

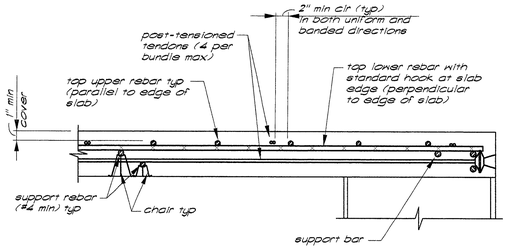

Tendon Layout over Column at Slab Edge

Detail 2 / S5.02

3305716-8

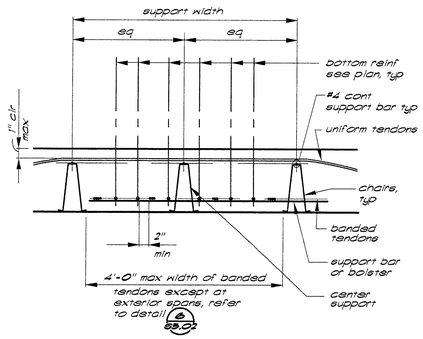

Section thru Banded Tendons at Mid-span

Detail 3 / S5.02

3305712-24

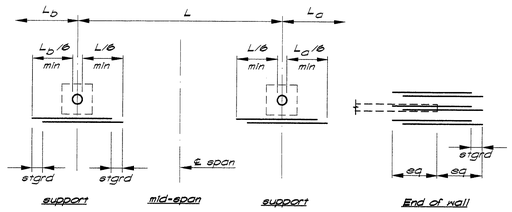

Cont and simple span

Note: Unless noted otherwise stagger all bars (all conditions) 12" unless space is insufficient in which case field adjust to less stagger.

Detail

Detail 4 / S5.02

Standard stagger top reinforcing

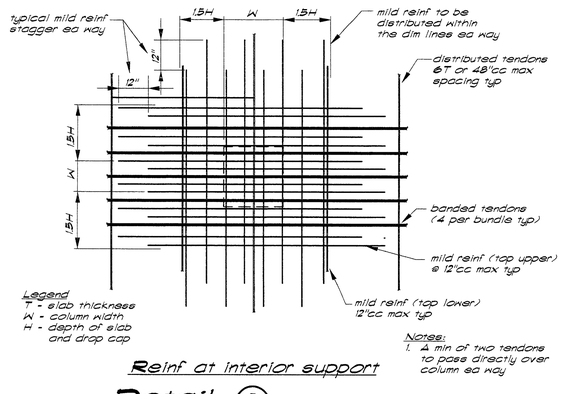

Legend
T - slab thickness
W - column width
H - depth of slab and drop cap

Notes:
1. A min of two tendons to pass directly over column ea way

Reinf at interior support

Detail 5 / S5.02

3305708-24

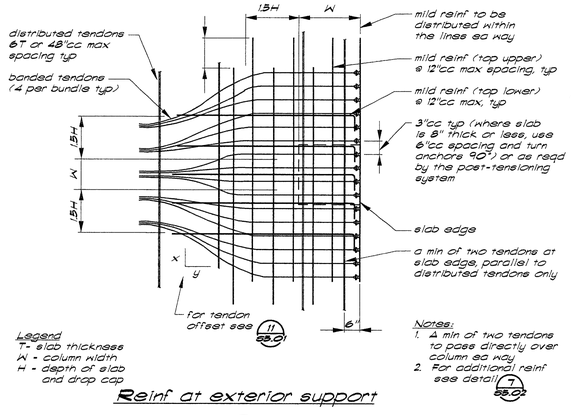

Legend
T- slab thickness
W - column width
H - depth of slab and drop cap

Notes:
1. A min of two tendons to pass directly over column ea way
2. For additional reinf see detail 7/S5.02

Reinf at exterior support

Detail 6 / S5.02

3305701-24

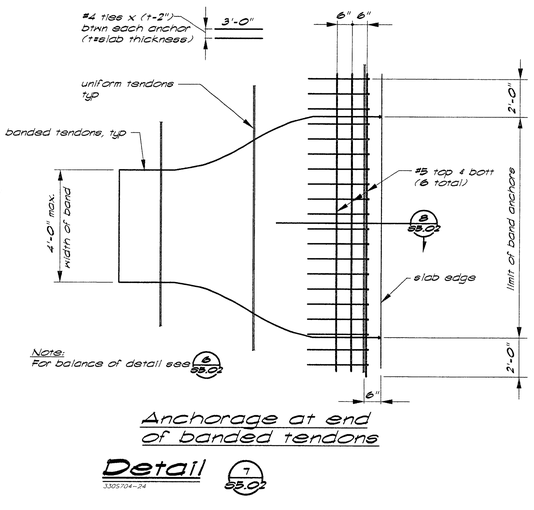

Note:
For balance of detail see 6/S5.02

Anchorage at end of banded tendons

Detail 7 / S5.02

3305704-24

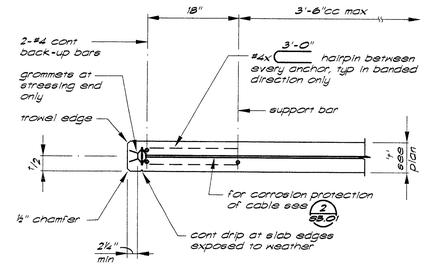

Detail

Detail 8 / S5.02

3305705-12

Approval of these plans by the City of Stockton is subject to compliance with all conditions of any Conditional Use Permit. Occupancy of structure not permitted until after final approval.

JOB SITE COPY

PLANS REVIEWED BY
Precision Inspection Company
Inspection and Consulting Services
Page 46 of 99

ENGLISH HARPER RETA
ARCHITECTS

580 UNIVERSITY AVENUE SUITE 100
SACRAMENTO, CA 95825 (916) 568-1821

THIS DRAWING IS NOT FINAL OR TO BE USED FOR CONSTRUCTION UNTIL IT IS SIGNED BY THE ARCHITECT AND THE OWNER.

ARCHITECT
EDWARD P. ENGLISH C-10399
RICHARD L. HARPER C-13830
RONALD A. RETA C- 9879

OWNER

CONTRACTOR

REGISTERED ARCHITECT RONALD A. RETA No. C-9879 EXP. DEC. 3-31-01 STATE OF CALIFORNIA

Turner Construction Company

BUEHLER & BUEHLER ASSOCIATES
STRUCTURAL ENGINEERS, INC.
7300 Folsom Blvd., Suite 103
Sacramento, Ca. 95826
(916) 381-8181

REGISTERED PROFESSIONAL ENGINEER LAWRENCE E. JONES No. SE 3138 Exp. 12/31/01 STRUCTURAL STATE OF CALIFORNIA

Essential Services Facility (UNDER SEPARATE DOCUMENT PACKAGE)

Parking Garage

KEY PLAN

DATE	NO.	DESCRIPTION
1/13/00	2	Overall Permit Set
11/15/99	2	Progress Set
10/18/99	1	Progress Set

REVISIONS

DRAWN BY
HLC

CHECKED BY
LEJ

Parking Garage
City of Stockton, California
FOUNDATION RE-DESIGN SET

DRAWING

TWO-WAY SLAB POST-TENSIONING

PROJECT NO. 98113
DRAWING NO. S5.02G
CADFILE S5_02.dwg
DATE 07 SEPTEMBER 1999

F:\98\98300\Garage\S5_02.dwg 01/11/00 17:15 BY Mark A. R.

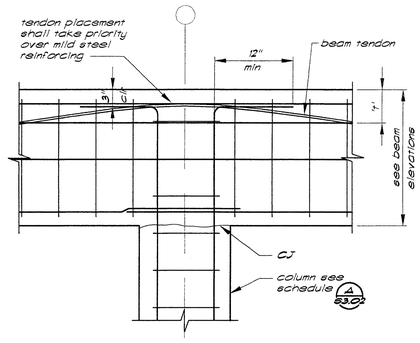

Detail 1 S5.03

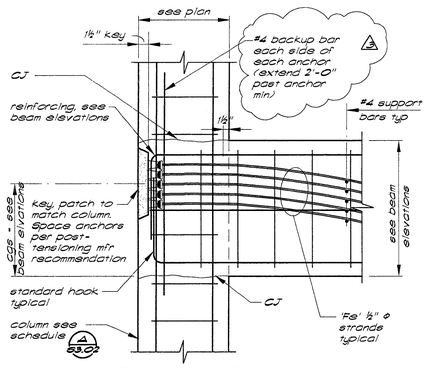

Detail 2 S5.03

3305733-16

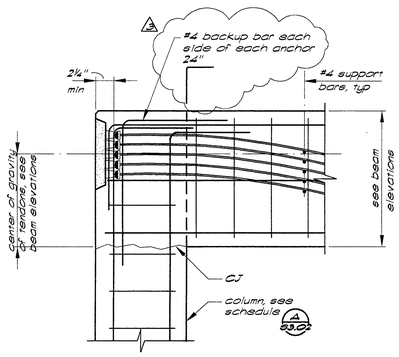

Detail 3 S5.03

3305734-16

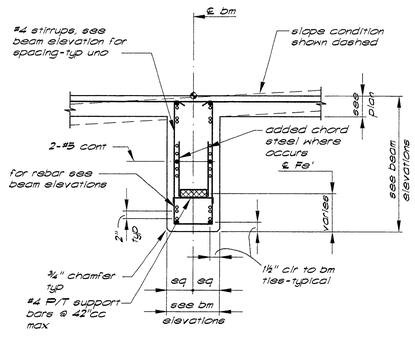

Section 4 S5.03

3305726-16

Note: adjust anchor layout to pass column vert steel

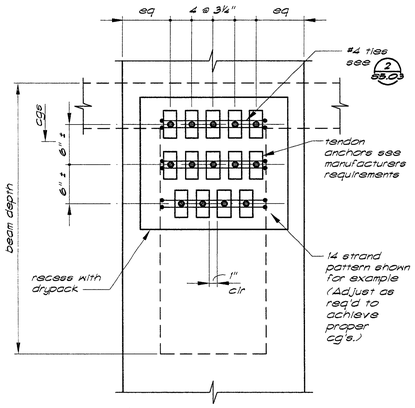

Elevation

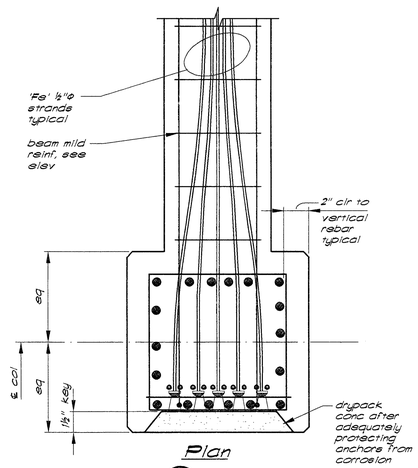

Plan

Typical Strand Pattern 5 S5.03

3305732-16

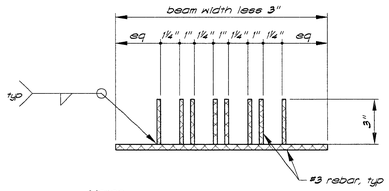

Notes:

1. Support chairs @ 42"cc max in beam w/ more than 9 tendons.
2. Fill support chair slots uniformly w/ tendons

Detail 10 S5.03

Tendon support chair

3305729-4

This set of plans and specifications MUST be kept on the job site at all times and it is unlawful for any person to remove this set from the job site until the project is completed. The visual contents of these documents are protected by U.S. Copyright Law. Unauthorized use of these documents is prohibited. Reproduction, publication or use without permission by the Architect is an infringement of copyright law. Submission or distribution of these documents to meet official regulatory requirements or for similar purposes in connection with the project is not to be construed as publication in derogation of the Architect's rights. Any violations of any Ordinance or Law. Occupancy of structure not permitted until after final approval.

JOB SITE COPY

PLANS REVIEWED BY
Precision Inspection Company
Inspection and Consulting Services
Page 49 Of 74

ENGLISH HARPER RETA
ARCHITECTS

580 UNIVERSITY AVENUE SUITE 100
SACRAMENTO, CA 95825 (916) 568-1821

THIS DRAWING IS NOT FINAL OR TO BE USED FOR CONSTRUCTION UNTIL IT IS SIGNED BY THE ARCHITECT AND THE OWNER.

ARCHITECT
EDWARD P. ENGLISH C-10399
RICHARD L. HARPER C-13830
RONALD A. RETA C- 9879

OWNER

CONTRACTOR

LICENSED ARCHITECT RICHARD L. HARPER No. C-13,830 REN. 3-31- STATE OF CALIFORNIA

Turner Construction Company

BUEHLER & BUEHLER ASSOCIATES
STRUCTURAL ENGINEERS, INC.
7300 Folsom Blvd., Suite 103
Sacramento, Ca. 95826
(916) 381-8181

REGISTERED PROFESSIONAL ENGINEER LAWRENCE E. JONES No. SE 3138 Exp. 12/31/01 STRUCTURAL STATE OF CALIFORNIA

Essential Services Facility (UNDER SEPARATE DOCUMENT PACKAGE)

Parking Garage

KEY PLAN

DATE	NO.	DESCRIPTION
1/13/00	2	Overall Permit Set
11/15/99	2	Progress Set
10/18/99	1	Progress Set

REVISIONS

DRAWN BY
HLC

CHECKED BY
LEJ

Parking Garage
City of Stockton, California
FOUNDATION RE-DESIGN SET

DRAWING
BEAM POST-TENSIONING TYPICAL DETAILS

PROJECT NO. 98113
DRAWING NO. S5.03G
CADFILE S5_03.dwg
DATE 07 SEPTEMBER 1999

F:\1998\98200\Garage\S5_03.dwg 01/11/00 17:16 98 Mark A. R.

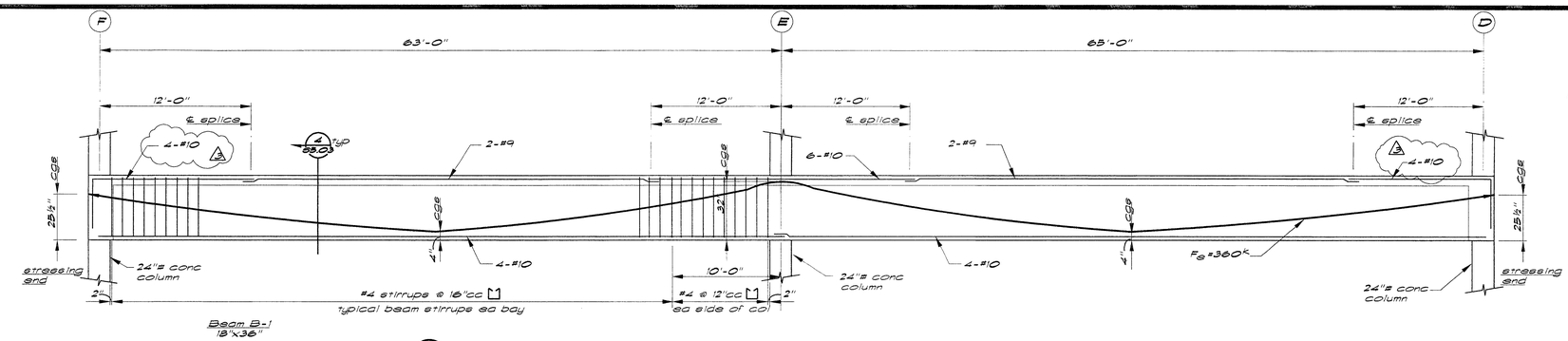

Beam B-1
18"x36"

Beam Elevation 1/S5.04 — 3/16"=1'-0" horizontal, 3/8"=1'-0" vertical

Note: see A/S5.04 for typical beam reinforcing notes

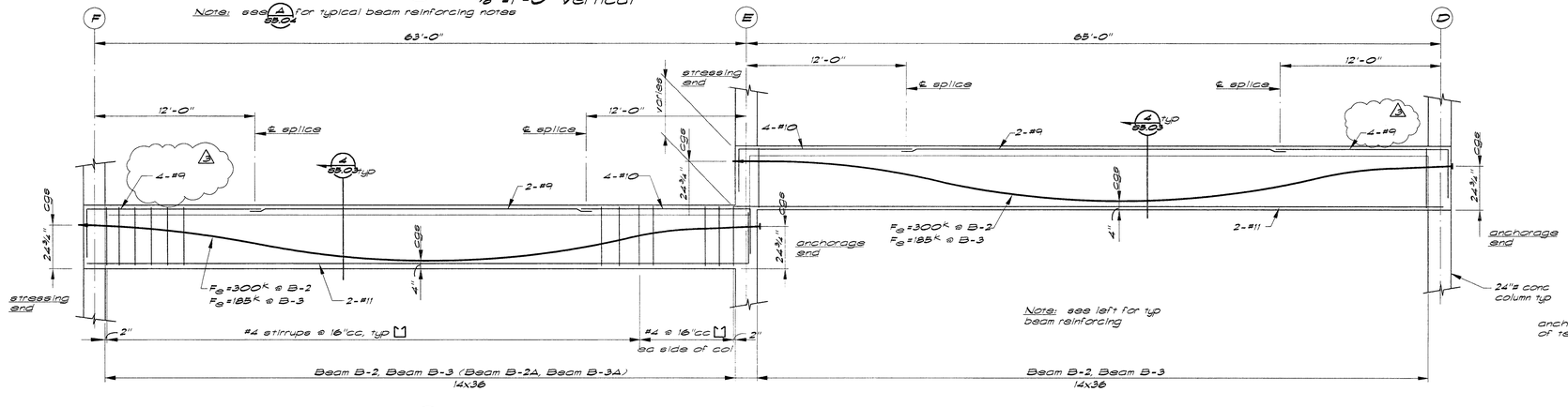

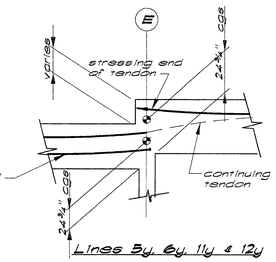

Lines 5y, 6y, 11y & 12y

Beam Elevation 2/S5.04 — 3/16"=1'-0" horiz, 3/8"=1'-0" vertical

Note: see A/S5.04 for typical beam reinforcing notes

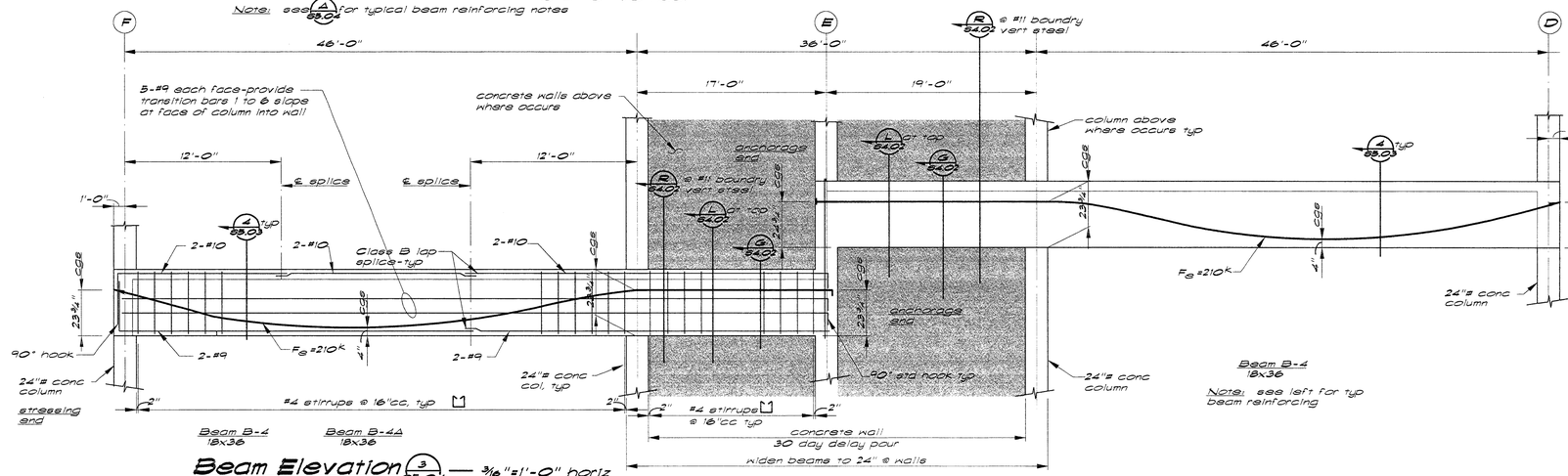

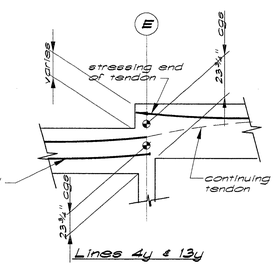

Lines 4y & 13y

Beam Elevation 3/S5.04 — 3/16"=1'-0" horiz, 3/8"=1'-0" vertical

Note: see A/S5.04 for typical beam reinforcing notes

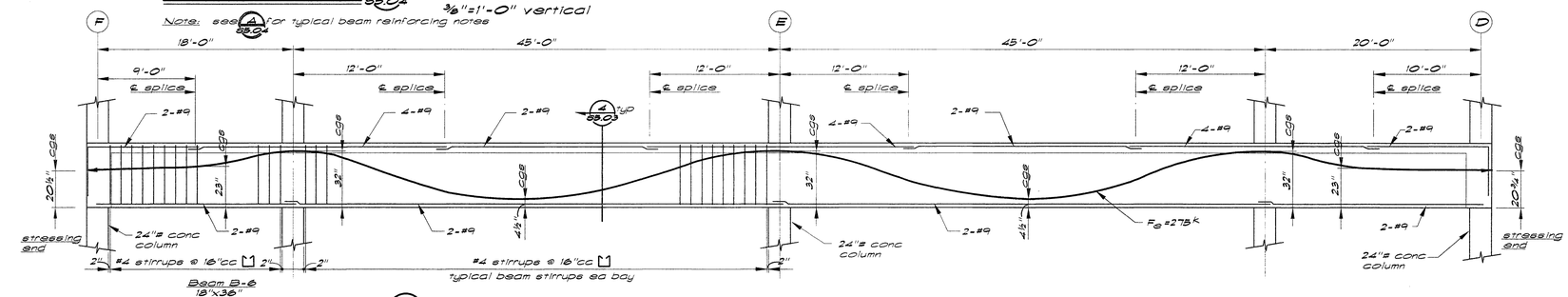

Beam Elevation 4/S5.04 — 3/16"=1'-0" horizontal, 3/8"=1'-0" vertical

Note: see A/S5.04 for typical beam reinforcing notes

Beam Reinf Notes

A/S5.04

1. Use offset legs at all rebar splices
2. Splice bars with Class B lap minimum
3. Terminate top bars with 90° standard hook at ends.
4. Lap splice bottom bars over column support with Class A splice as req'd.
5. See sheet S3.01 for typical post-tensioning notes & details

ENGLISH HARPER RETA
ARCHITECTS

580 UNIVERSITY AVENUE SUITE 100
SACRAMENTO, CA 95825 (916) 568-1821

THIS DRAWING IS NOT FINAL OR TO BE USED FOR CONSTRUCTION UNTIL IT IS SIGNED BY THE ARCHITECT AND THE OWNER.

ARCHITECT
EDWARD P. ENGLISH C-10399
RICHARD L. HARPER C-13830
RONALD A. RETA C- 9879

OWNER

CONTRACTOR

LICENSED ARCHITECT EDWARD P. ENGLISH C-10399 REN. 3-31 STATE OF CALIFORNIA

Turner Construction Company

BUEHLER & BUEHLER ASSOCIATES
STRUCTURAL ENGINEERS, INC.
7300 Folsom Blvd., Suite 103
Sacramento, Ca. 95826
(916) 381-8181

REGISTERED PROFESSIONAL ENGINEER LAWRENCE "E." JONES No. SE 3138 Exp. 12/31/01 STRUCTURAL STATE OF CALIFORNIA

Essential Services Facility (UNDER SEPARATE DOCUMENT PACKAGE)

Parking Garage

KEY PLAN

DATE	NO.	DESCRIPTION
1/13/00	3	Overall Permit Set
11/15/99	2	Progress Set
10/18/99	1	Progress Set

REVISIONS

DRAWN BY
HLC

CHECKED BY
DTE

Parking Garage
City of Stockton, California
FOUNDATION RE-DESIGN SET

DRAWING
BEAM ELEVATIONS
-
-

PROJECT NO. 98113
DRAWING NO. S5.04G
CADFILE S5_04
DATE 07 SEPTEMBER 1999

JOB SITE COPY

PLANS REVIEWED BY Holdren Inspection Company Inspection and Consulting Services
Page 48 Of 94

E:\98\98113\Comp\S5_04.dwg 09/15/00 17:17 Bill Mitch A. R.

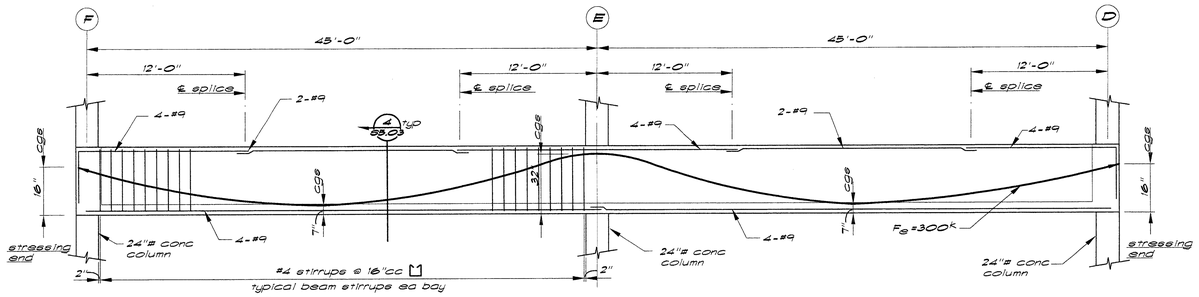

Beam B-5
24"x36"

Beam Elevation 1 S5.03 — 3/16"=1'-0" horizontal
3/8"=1'-0" vertical

Note: see A S5.04 for typical beam reinforcing notes

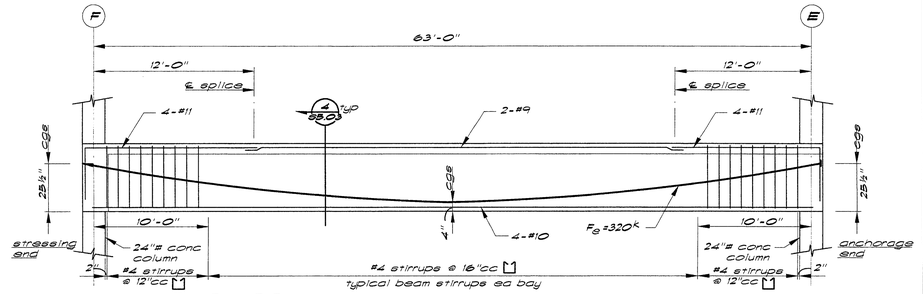

Beam B-7
18"x36"

Beam Elevation 2 S5.03 — 3/16"=1'-0" horizontal
3/8"=1'-0" vertical

Note: see A S5.04 for typical beam reinforcing notes

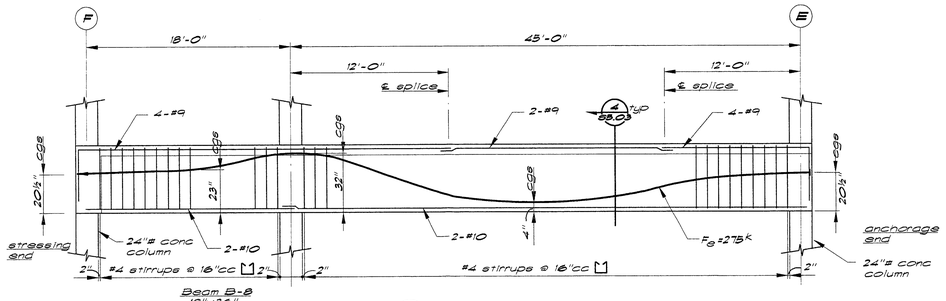

Beam B-8
18"x36"

Beam Elevation 3 S5.03 — 3/16"=1'-0" horizontal
3/8"=1'-0" vertical

Note: see A S5.04 for typical beam reinforcing notes

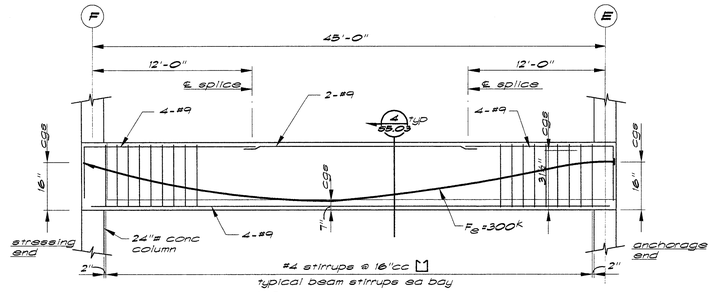

Beam B-9
24"x36"

Beam Elevation 4 S5.03 — 3/16"=1'-0" horizontal
3/8"=1'-0" vertical

Note: see A S5.04 for typical beam reinforcing notes

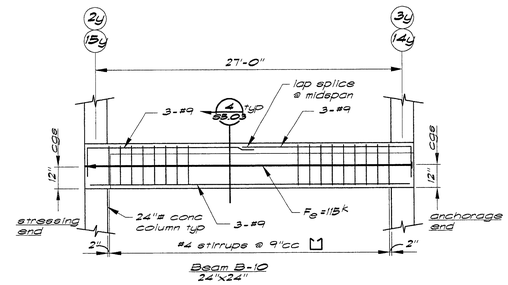

Beam B-10
24"x24"

Beam Elevation 5 S5.03 — 3/16"=1'-0" horizontal
3/8"=1'-0" vertical

Note: see A S5.04 for typical beam reinforcing notes

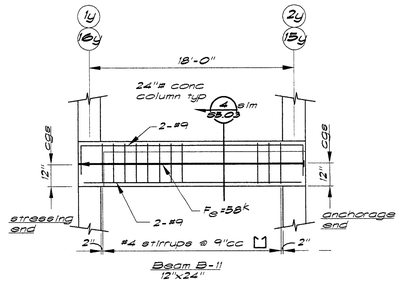

Beam B-11
12"x24"

Beam Elevation 6 S5.03 — 3/16"=1'-0" horizontal
3/8"=1'-0" vertical

Note: see A S5.04 for typical beam reinforcing notes

This set of plans and specifications MUST be kept on the job at all times ... permitted until after ... final approval.

JOB SITE COPY

PLANS REVIEWED BY
Allen Inspection Company
Inspection and Consulting Services
Page 49 of 59

ENGLISH HARPER RETA
ARCHITECTS

580 UNIVERSITY AVENUE SUITE 100
SACRAMENTO, CA 95825 (916) 568-1821

THIS DRAWING IS NOT FINAL OR TO BE USED FOR CONSTRUCTION UNTIL IT IS SIGNED BY THE ARCHITECT AND THE OWNER.

ARCHITECT
EDWARD P. ENGLISH C-10399
RICHARD L. HARPER C-13830
RONALD A. RETA C- 9879

OWNER

CONTRACTOR

LICENSED ARCHITECT RICHARD L. HARPER REN. 3-31- STATE OF CALIFORNIA

Turner Construction Company

BUEHLER & BUEHLER ASSOCIATES
STRUCTURAL ENGINEERS, INC.
7300 Folsom Blvd., Suite 103
Sacramento, Ca. 95826
(916) 381-8181

REGISTERED PROFESSIONAL ENGINEER LAWRENCE E. JONES No. SE 3138 Exp. 12/31/01 STRUCTURAL STATE OF CALIFORNIA

Essential Services Facility (UNDER SEPARATE DOCUMENT PACKAGE)
Parking Garage

KEY PLAN

DATE	NO.	DESCRIPTION
1/13/00	3	Overall Permit Set
11/15/99	2	Progress Set
10/18/99	1	Progress Set

REVISIONS
DRAWN BY
MFS
CHECKED BY
LEJ

Parking Garage
City of Stockton, California
FOUNDATION RE-DESIGN SET

DRAWING
BEAM ELEVATIONS
-
-

PROJECT NO. 98113
DRAWING NO. S5.05G
CADFILE S5_05.dwg
DATE 07 SEPTEMBER 1999

F:\1998\2200\dwgs\S5_05.dwg 01/11/00 17:17 Bill Wirs A R

S305001-1

Deck Welding Schedule (S6.01G)

Deck Type	Depth & Gauge	Perpendicular Supports	Parallel Supports	Side Laps	Diaphragm Shear Capacity
3N-24 Roof Deck	3"x 18ga	4 - PW per sheet	PW @ 12" cc	BP @ 12" cc	280#/ft

1. PW= ½ effective diameter puddle weld ; TSW= ½ min. top seam weld ; BP= button punch
2. Metal deck shall be BHP or approved equal, of type and gauge shown on plans and welded as shown above.
3. At composite floor decks, 3/4"ø shear studs may substitute for ¾"ø puddle welds.
4. See (B S6.01G) for typical weld patterns.
5. See (1 S6.01G) for metal deck welding at struct steel supports.
6. All metal deck shall have two spans minimum.
7. Provide shoring as required at all decks per mfr recommendations.

S305002-1

Metal Deck Weld Patterns (B S6.01G)

Deck Type	Profile	No. ¾"ø PW per sheet
Type 3N24	24"	4

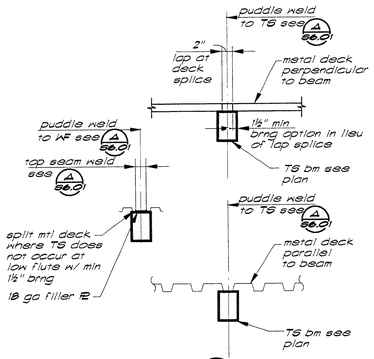

Detail (1 S6.01G)
S305003-12
Metal deck without concrete to WF beams

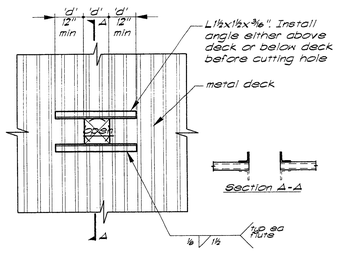

Note: Applies at holes from 6" to 24" wide in metal deck without concrete.

Detail (2 S6.01G)
S305016-12

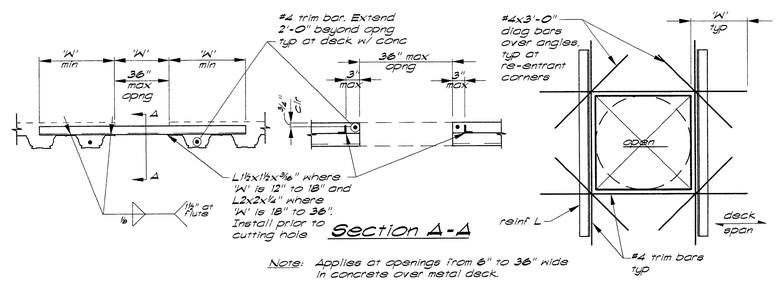

Note: Applies at openings from 6" to 36" wide in concrete over metal deck.

Detail (3 S6.01G)
S305017-12

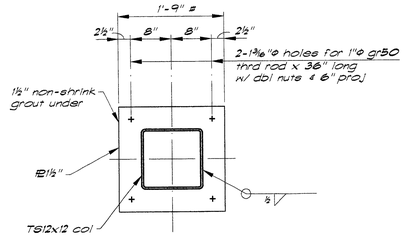

Detail (4 S6.01G) — 1"=1'-0"

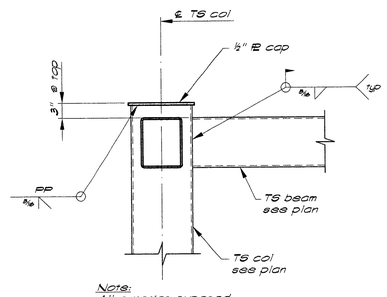

Note: All exterior exposed steel to be galvanized G-60

Detail (5 S6.01G) — 1"=1'-0"

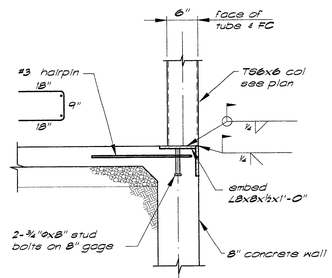

Detail (6 S6.01G) — 1"=1'-0"

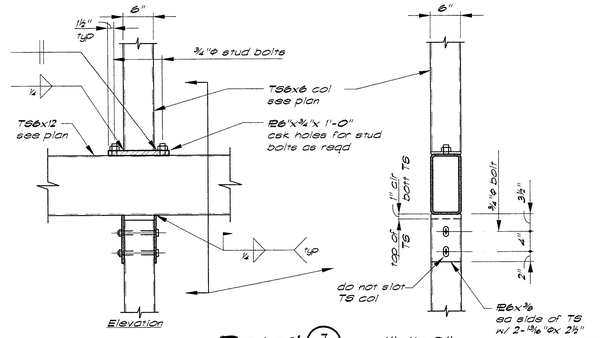

Detail (7 S6.01G) — 1"=1'-0"
Elevator guide rail support column/spreader beam

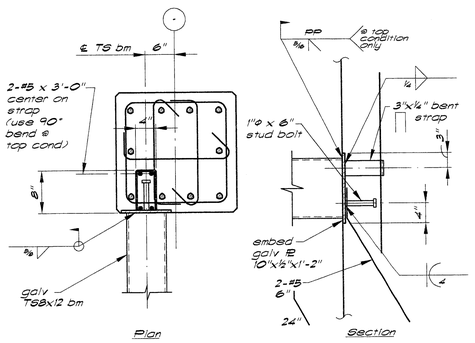

Detail (8 S6.01G) — 1"=1'-0"

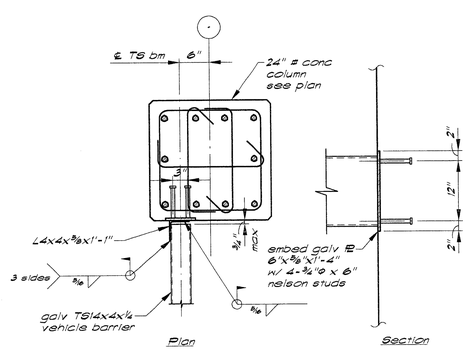

Detail (9 S6.01G) — 1"=1'-0"

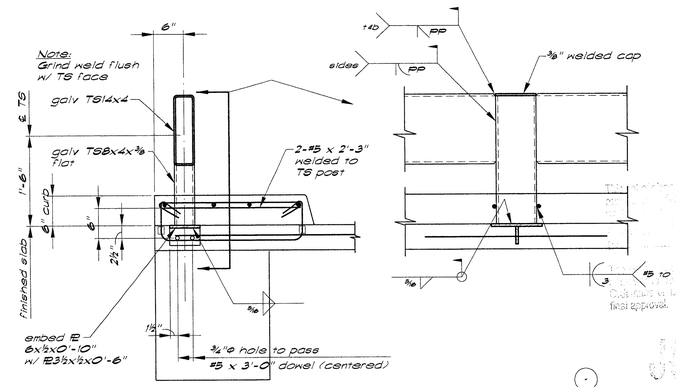

Detail (10 S6.01G) — 1"=1'-0"

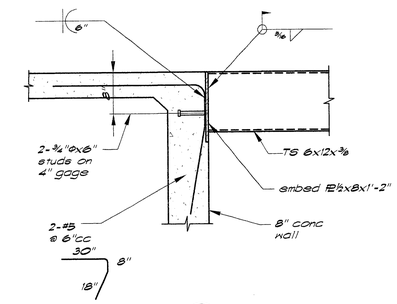

Detail (11 S6.01G) — 1"=1'-0"

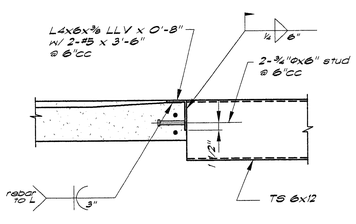

Detail (12 S6.01G) — 1"=1'-0"

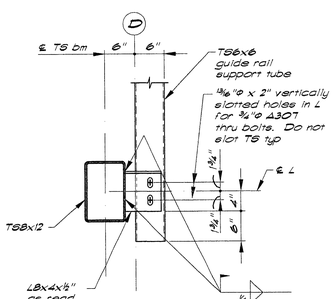

Detail (13 S6.01G) — 1"=1'-0"

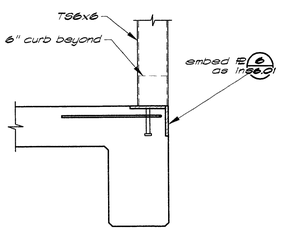

Detail (14 S6.01G) — 1"=1'-0"

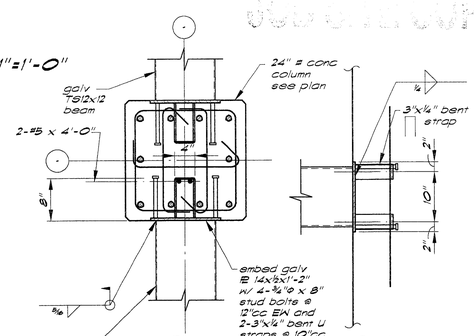

Detail (15 S6.01G) — 1"=1'-0"

PLANS REVIEWED BY
Precision Inspection Company
Inspection and Consulting Services
Page 50 Of 129

ENGLISH HARPER RETA
ARCHITECTS

580 UNIVERSITY AVENUE SUITE 100
SACRAMENTO, CA 95825 (916) 568-1821

THIS DRAWING IS NOT FINAL OR TO BE USED FOR CONSTRUCTION UNTIL IT IS SIGNED BY THE ARCHITECT AND THE OWNER.

ARCHITECT
EDWARD P. ENGLISH C-10399
RICHARD L. HARPER C-13830
RONALD A. RETA C- 9879

OWNER

CONTRACTOR

REGISTERED ARCHITECT RONALD A. RETA No. C-9879 EXP. 3-31-01 STATE OF CALIFORNIA

Turner Construction Company

BUEHLER & BUEHLER ASSOCIATES
STRUCTURAL ENGINEERS, INC.
7300 Folsom Blvd., Suite 103
Sacramento, Ca. 95826
(916) 381-8181

REGISTERED PROFESSIONAL ENGINEER LAWRENCE E. JONES No. SE 3138 Exp. 12/31/01 STRUCTURAL STATE OF CALIFORNIA

...shall be held to at all times ... without ... Stockton. ... shall be held to ... any provisions of any ... is obtained. Copying, any disclosure not permitted until after first approval.

Essential Services Facility (UNDER SEPARATE DOCUMENT PACKAGE)

Parking Garage

KEY PLAN

DATE	NO.	DESCRIPTION
1/13/00	3	Overall Permit Set
11/15/99	2	Progress Set
10/18/99	1	Progress Set

REVISIONS

DRAWN BY
MAR

CHECKED BY
LEJ

Parking Garage
City of Stockton, California
FOUNDATION RE-DESIGN SET

DRAWING
DETAILS
-
-

PROJECT NO. 98113
DRAWING NO. S6.01G
CADFILE S6_01.dwg
DATE 07 SEPTEMBER 1999

\\PROJECTS\Concept\S6_01.dwg 01/11/00 17:18 96 Mark A. R.

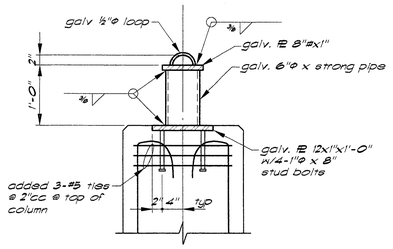

Detail 1/S6.02 — 1"=1'-0"

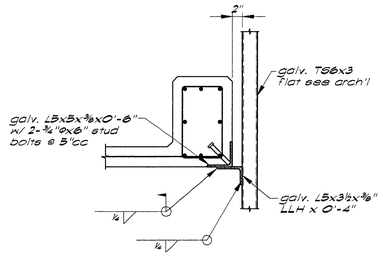

Detail 2/S6.02 — 1"=1'-0"

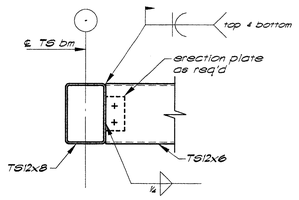

Detail 3/S6.02 — 1"=1'-0"

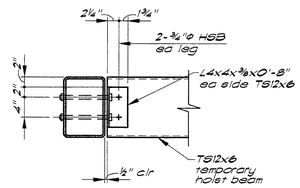

Detail 4/S6.02 — 1"=1'-0"

This set of plans and calculations MUST be kept on the job at all times and the [illegible] Ordinance or Law. Occupancy of structure not permitted until after final approval.

JOB SITE COPY

PLANS REVIEWED BY
Precision Inspection Company
Inspection and Consulting Services
Page 51 of 179

ENGLISH HARPER RETA
ARCHITECTS

580 UNIVERSITY AVENUE SUITE 100
SACRAMENTO, CA 95825 (916) 568-1821

THIS DRAWING IS NOT FINAL OR TO BE USED FOR CONSTRUCTION UNTIL IT IS SIGNED BY THE ARCHITECT AND THE OWNER.

ARCHITECT
EDWARD P. ENGLISH C-10399
RICHARD L. HARPER C-13830
RONALD A. RETA C- 9879

OWNER

CONTRACTOR

Turner Construction Company

BUEHLER & BUEHLER ASSOCIATES
STRUCTURAL ENGINEERS, INC.
7300 Folsom Blvd., Suite 103
Sacramento, Ca. 95826
(916) 381-8181

KEY PLAN

DATE	NO.	DESCRIPTION
1/13/00	3	Overall Permit Set
11/15/99	2	Progress Set
10/18/99	1	Progress Set

REVISIONS

DRAWN BY
MAR

CHECKED BY
LEJ

Parking Garage
City of Stockton, California
FOUNDATION RE-DESIGN SET

DRAWING
DETAILS
-
-

PROJECT NO. 98113
DRAWING NO. S6.02G
CADFILE S6_02.dwg
DATE 07 SEPTEMBER 1999

Precast Concrete Notes:

1. All precast panels shall be 5" minimum net thickness unless noted otherwise.
2. Concrete strength shall be 5000 psi at 28 days.
3. Precast manufacturer shall submit complete design drawings and calculations for all precast concrete panels as follows:
   a. Drawings shall be stamped and signed by a Structural Engineer licensed in the State of California.
   b. Calculations shall be prepared, stamped and signed by a Structural Engineer licensed in the State of California.
4. All panels shall be designed for all vertical and lateral loads (wind and seismic) as required by the 1997 UBC. Design seismic story drift = 0.025 x story height maximum, using maximum Inelastic Response Displacement.
5. Panels shall be supported directly from structural column framing for both vertical and lateral loads. Wherever possible u.n.o. Intermediate lateral connections may occur on beams, see note #9.
6. All connections shall be fastened by means of cast-in-place concrete or mechanical connections and fasteners. All bearing connections shall be welded to the structural framing for a minimum net upward force 50% of bearing load.
7. Automatic end welded stud bolts are not allowed for precast panel connections.
8. Details indicated are for reference only. Precast manufacturer shall design, supply and install all connection materials. This shall include embedded items, bearing plates, stiffeners, diagonal struts, support angles, channels, tubes, etc. Items embedded in concrete shall be installed by the Contractor.
9. All loading conditions resulting in eccentricities or torsion to spandrel beams and perimeter columns shall be resolved by the installation of stiffeners and diagonal struts where possible or panels shall be designed with stiffeners to resolve eccentric moments in panels. All stiffeners & struts shall be designed, supplied, and installed by Precast Manufacturer.
10. Additional tube columns between structural beams or cantilevered tubes @ base all panels required for the support of precast panels shall be designed, supplied, and installed by the Precast Manufacturer.
11. See Architectural drawings for typical dimensions, panel configuration details and finishes.
12. Typical panel elevations indicate general structural design concepts used in sizing structural columns and beams. Any changes to concepts shown must be approved by the City prior to submittal of design documents.
13. Precast stair treads and gutters shall be designed according to dimensions shown in architectural drawings. Provide and locate embeds to be installed by Contractor.
14. Use cast-in-place inserts for all (ie: window, stud or Mech louver framing etc.) attachments to precast panels where edge distance for inserts is less than 6" from edge of panel. Provide #3 x 18" long rebar to pass thru ferrule loop. Contractor shall coordinate anchor size & spacing with design documents and window system submittals.
15. All exterior exposed connections and fasteners shall be galvanized G60 min.
16. Design roof parapets for vertical and horizontal loads along entire length of all parapets for window washing tie-backs and safety lines. Allow for impact load of 5400 lbs.

Detail Notes:

1. Brace designed by Precast (P.C.) manufacture-L3½"x3½" min.
2. Bearing plate and stiffner plate designed by P.C. manufacturer-⅜" min.
3. Tube Section designed by P.C. manufacturer-TS 4x4 min.
4. Stiffner plate 8x5x½"-min. on angles as req'd by P.C. manufacturer.
5. Rod designed by P.C. manufacturer w/ double nut & plate washers.
6. Angle support for in-out connection designed by P.C. manufacturer.
7. Slab blockout for precast connection by General Contractor. Coordinate size w/ P.C. manufacturer
8. Structural steel beam.
9. Structural steel column.
10. Bearing connection by P.C. manufacturer.
11. Bearing plate-½" min.
12. Tube section designed by P.C. manufacturer-TS 3x3 min.
13. Precast panel return
14. Precast panel
15. Precast column cover.
16. Bearing angle designed by P.C. manufacturer
17. Welding connection by P.C. manufacturer
18. Panel support connection through panel joint
19. Precast stair tread
20. Precast cap
21. Embed connections by precast manufacturer.
22. Weld plate each side
23. Bracing as required.

Legend

▼ = bearing connection
✱ = in-out connection

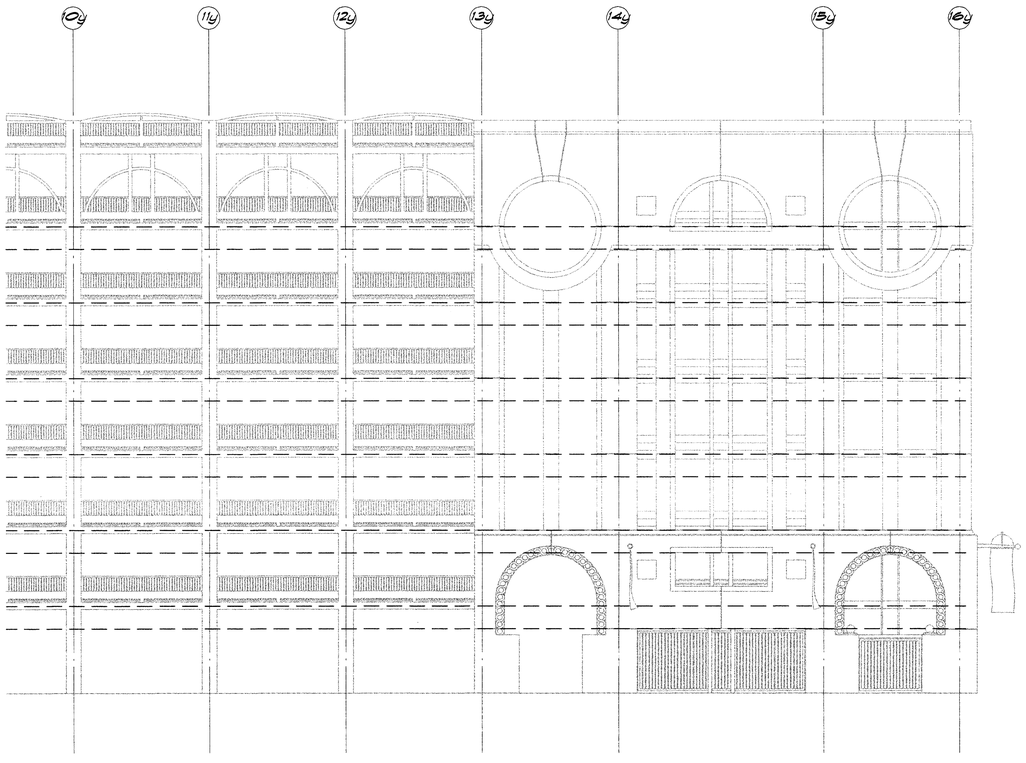

Typical Precast Panel Elevation (1 / S7.01G) — ⅛"=1'-0"

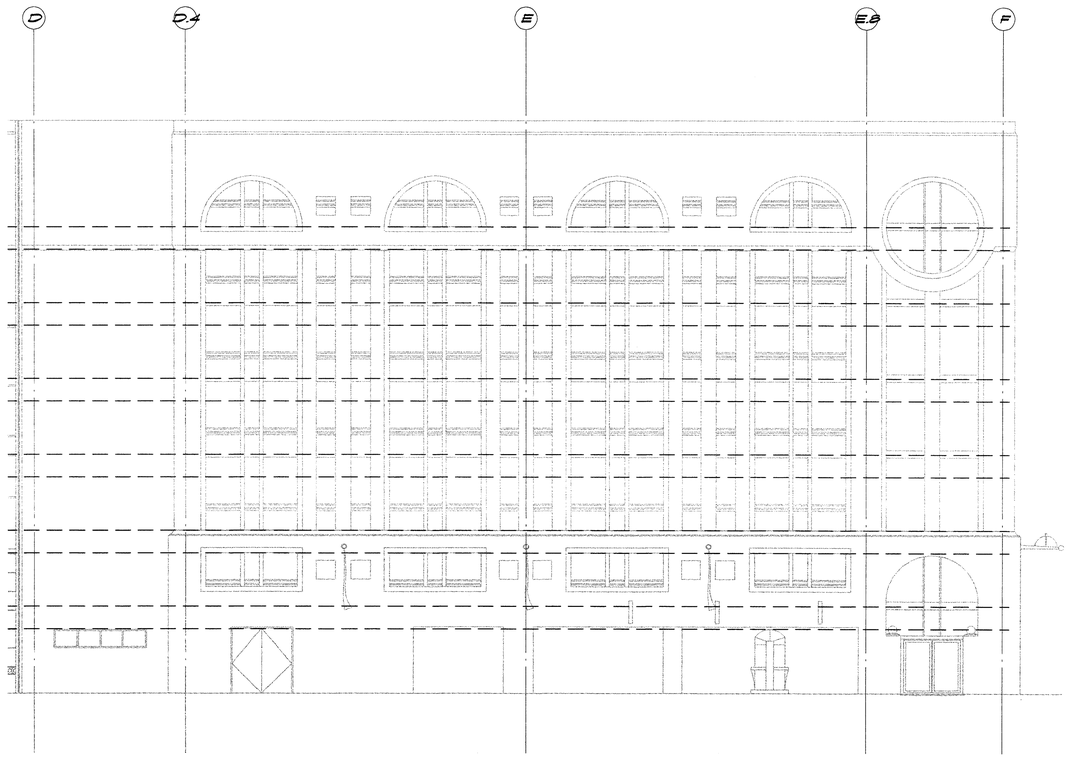

Typical Precast Panel Elevation (2 / S7.01G) — ⅛"=1'-0"

This set of plans and calculations MUST be kept on the job at all times and it is unlawful to make any changes or alterations on same unless written authorization from Building Inspection, City of Stockton APPROVED Date By

The issuing of this plan or permit does not prevent the building official from requiring the correction of errors in the plans or construction or violations of any Ordinance or Law. Occupancy of structure not permitted until after final approval.

JOB SITE COPY

PLANS REVIEWED BY Precision Inspection Company Inspection and Consulting Services

Page 52 of 59

ENGLISH HARPER RETA
ARCHITECTS

580 UNIVERSITY AVENUE SUITE 100
SACRAMENTO, CA 95825 (916) 568-1821

THIS DRAWING IS NOT FINAL OR TO BE USED FOR CONSTRUCTION UNTIL IT IS SIGNED BY THE ARCHITECT AND THE OWNER.

ARCHITECT
EDWARD P. ENGLISH C-10399
RICHARD L. HARPER C-13530
RONALD A. RETA C- 9879

OWNER

CONTRACTOR

REGISTERED ARCHITECT EDWARD P. ENGLISH No. C-10399 EXPIRES 8-31- STATE OF CALIFORNIA

Turner Construction Company

BUEHLER & BUEHLER ASSOCIATES
STRUCTURAL ENGINEERS, INC.
7300 Folsom Blvd., Suite 103
Sacramento, Ca. 95826
(916) 381-8181

REGISTERED PROFESSIONAL ENGINEER LAWRENCE E. JONES No. SE 3138 Exp. 12/31/01 STRUCTURAL STATE OF CALIFORNIA

Essential Services Facility (UNDER SEPARATE DOCUMENT PACKAGE)

Parking Garage

KEY PLAN

DATE	NO.	DESCRIPTION
1/13/00	2	Overall Permit Set
11/15/99	2	Progress Set
10/18/99	1	Progress Set

REVISIONS

DRAWN BY
MAR

CHECKED BY
LEJ

Parking Garage
City of Stockton, California
FOUNDATION RE-DESIGN SET

DRAWING

PRECAST PANEL DETAILS + ELEVATIONS

PROJECT NO. 98113
DRAWING NO. S7.01G
CADFILE S7_01.dwg
DATE 07 SEPTEMBER 1999

F:\1998\8320\Corrup\S7_01.dwg 01/11/00 17:19 98 Mark A. R.

GENERAL NOTES

1. ALL WORK SHALL COMPLY WITH ALL APPLICABLE CODES, SPECIFICATIONS, LOCAL ORDINANCES AND INDUSTRY STANDARDS.
2. SEE REFLECTED CEILING PLAN FOR EXACT LOCATION OF ALL CEILING DIFFUSERS, REGISTERS, AND GRILLS.
3. MANUAL AIR DAMPERS SHALL BE INSTALLED AT ALL DUCT BRANCH TAKEOFFS TO A SINGLE SUPPLY DIFFUSER.
4. IN GENERAL, FLEXIBLE DUCTWORK CONNECTIONS TO CEILING DIFFUSERS ARE LIMITED TO 10' MAXIMUM LENGTH. (OR AS SHOWN).
5. TERMINAL UNITS SHALL BE LOCATED FOR EASY ACCESS.
6. FIRE/SMOKE DAMPERS SHALL BE STATE FIRE MARSHALL APPROVED AND INSTALLED STRICTLY PER MANUFACTURER'S PRINTED INSTRUCTIONS. MANUFACTURER'S INSTALLATION INSTRUCTIONS SHALL BE MADE AVAILABLE TO THE INSPECTING AUTHORITIES. TIME RATING OF DAMPERS SHALL BE SELECTED TO SUIT ASSEMBLY PENETRATED. REFER TO ARCHITECTURAL DRAWINGS.
7. FIRE/SMOKE DAMPERS REQUIRE 120 VOLT POWER SUPPLY BY ELECTRICAL CONTRACTOR.
8. FIRE/SMOKE DAMPERS CONTROLLED AND MONITORED BY LIFE SAFTY SYSTEM.

EQUIPMENT SCHEDULE

AC 1

WEST SIDE ELEVATOR EQUIP. RM. AC UNIT

"CARRIER" MODEL 50AH048, SELF CONTAINED, AIR COOLED, DX COOLING AC UNIT. 4 TON NOMINAL CAPACITY, 1600 CFM, 9.1 EER, COMPRESSOR RLA=7.4, LRA=49.5, EVAP FAN FLA= 2.15, CONDENSER FAN FLA=1.97, MIN. CIRCUIT AMPS= 13.4, MAX FUSE SIZE= 15A WT = 600 LBS.

EF 1

EXHAUST FAN:
GREENHECK MODEL BSQ-120-4, 1000 CFM @ .50 SP , 1/4 HP MOTOR, .18 BHP, 460V/3Ø/60HZ WT = 75 LBS

GRILLE, REGISTER, DIFFUSER SCHEDULE

SYMBOL	DESCRIPTION
S1	SUPPLY DIFFUSER - 1 "TITUS" MODEL 272 RS OR EQUAL, STEEL CONSTRUCTION, FRAME TYPE 6 FOR SURFACE MOUNTING. SIZE AS INDICATED ON DRAWINGS, STANDARD FINISH.
R1	RETURN REGISTER - 1 "TITUS" MODEL 300RL OR EQUAL, STEEL CONSTRUCTION, FRAME TYPE 6 FOR SURFACE MOUNTING, SIZE AS INDICATED ON DRAWINGS, STANDARD FINISH. STANDARD FINISH.

L E G E N D

LRA	LOCKED ROTOR AMPS
SQFT	SQUARE FEET
FT	FEET
PSI (G)	POUNDS PER SQUARE INCH (GAUGE)
RPM	REVOLUTIONS PER MINUTE
ΔP	PRESSURE DIFFERENCE
FA, TA, FB, TB	FROM ABOVE, TO ABOVE, FROM BELOW, TO BELOW
TCV	TEMPERATURE CONTROL VALVE
(R)	RISE
(D)	DROP
WB	WET BULB
DB	DRY BULB
TYP.	TYPICAL
MBH	THOUSAND BRITISH THERMAL UNITS PER HOUR
AFP	AIR FOIL PLENUM
CHS, CHR	CHILLED WATER SUPPLY, CHILLED WATER RETURN
HWS, HWR	HOT WATER SUPPLY, HOT WATER RETURN
	GAUGE COCK ---- GC
	FLOW CONTROL VALVE ----FCV
	BUTTERFLY VALVE ----BFD
CK.V	CHECK VALVE
G.V.	GATE VALVE

10x12 Δ L	ACCOUSTICALLY LINED DUCT - DIMENSIONS ARE OUTSIDE
	BRANCH TAKE-OFF WITH THROAT SIZE AS INDICATED. TRANSITION TO DUCT SIZES SHOWN.
R(D)	DUCT RISE (DROP) IN DIRECTION OF AIR FLOW
8x10	DUCT - WIDTH x DEPTH
	LATERAL WITH TRANSITION TO DUCT SIZES INDICATED
	RADIUS ELL. SEE SPECS.
	SQUARE ELL WITH TURNNING VANES
6"ø 6x6	TRANSITION ROUND TO RECTANGULAR
	VERTICAL DUCT RISE OR DROP
	DUCT DROP OR RISE THRU ROOF OR FLOOR
	RETURN, OUTSIDE, OR EXHAUST AIR DUCT
	SUPPLY DUCT
T	THERMOSTAT
MAD	MANUAL AIR DAMPER
F	FIRE DAMPER
F/S	COMBINATION FIRE SMOKE DAMPER ASSEMBLY
RS	REFRIGERANT SUCTION
RL	REFRIGERANT LIQUID
CD	CONDENSATE DRAIN
ABV.	ABOVE
AL	ACCOUSTICALLY LINED
CFM, f	CUBIC FEET OF AIR PER MINUTE
C.D.	CONDENSATE DRAIN
~	DIAMETER
EA OA RA SA	EXHAUST, OUTSIDE, RETURN, SUPPLY, AIR
FC	FLEXIBLE CONNECTION
FS	FLOOR SINK
GALV.	GALVANIZED
GA	GAUGE
O.C.	ON CENTER
OH AB.C.	OVERHEAD, ABOVE CEILING
S.M.	SHEET METAL
S.S.	STAINLESS STEEL
STL.	STEEL
THK.	THICK
U.G. UF.	UNDERGROUND, UNDERFLOOR
W.T. A.T.	WATERTIGHT, AIRTIGHT
(N), (E)	NEW, EXISTING
TCP	TEMPERATURE CONTROL PANEL
VFD	VARIABLE FREQUENCY DRIVE
OAD	OUTSIDE AIR DAMPER
RAD	RETURN AIR DAMPER
EAD	EXHAUST AIR DAMPER
DR	DRAIN RECEPTOR
SF	SUPPLY FAN
RF	RETURN FAN
EF	EXHAUST FAN
ENT	ENTERING
SA	SUPPLY AIR
RA	RETURN AIR
	FLEXIBLE DUCT
HP	HORSE POWER
BHP	BRAKE HORSE POWER
SP	STATIC PRESSURE
TSP	TOTAL STATIC PRESSURE (IN H20)
ESP	EXTERNAL STATIC PRESSURE (H20)
LBS	POUNDS
GPM	GALLONS PER MINUTE
FPI	FINS PER INCH
APD	AIR PRESSURE DROP
WPD	WATER PRESSURE DROP
FPM	FEET PER MINUTE
EWT	ENTERING WATER TEMPERATURE
LWT	LEAVING WATER TEMPERATURE
°F	DEGREES FAHRENHEIT
RLA	RUNNING LOAD AMPS
VFD	VARIABLE FREQUENCY DRIVE
TCP	TEMPERATURE CONTROL PANEL
EC	ELECTRICAL CONTRACTOR

This set of plans and calculations MUST be kept on the job at all times and it is unlawful to make any changes or alterations on same without permission, in writing, from Building Inspection, City of Stockton.
APPROVED Date
Permit No.
The stamping of this plan and specifications SHALL NOT be held to permit or to be an approval of the violation of any provisions of any Ordinance or Law. Occupancy of structure not permitted until after final approval.
JOB SITE COPY

PLANS REVIEWED BY
Precision Inspection Company
Inspection and Consulting Services

ENGLISH HARPER RETA
ARCHITECTS

580 UNIVERSITY AVENUE SUITE 100
SACRAMENTO, CA 95825 (916) 568-1521

THIS DRAWING IS NOT FINAL OR TO BE USED FOR CONSTRUCTION UNTIL IT IS SIGNED BY THE ARCHITECT AND THE OWNER.

ARCHITECT
EDWARD P. ENGLISH C-10399
RICHARD L. HARPER C-13830
RONALD A. RETA C- 9879

OWNER

CONTRACTOR

REGISTERED ARCHITECT RONALD A. RETA No. C-9879 RENEWAL 3-31-01 STATE OF CALIFORNIA

Turner Construction Company

FMB FRANK M. BOOTH DESIGN BUILD CO.
OUR PERFORMANCE BUILDS RELATIONSHIPS ®
CONTRACTORS LICENSE CAL. 142219 NEV. 15940
916-784-0777 Roseville CA. 95661

PLEASE NOTE
These Drawings, Specifications and Documents have been prepared by FMB Design Build Co. for their exclusive use in accordance with section 6737.4 of the Professional Engineers Act of the State of California. FMB reserves all Rights regarding any use of these Documents.

APPROVED BY PROJECT MANAGER	APPROVED BY PROJECT ENGINEER
BE 8-30-99	RA 8-30-99
DESIGNED/DRAFTED BY CEB/MDE	

REGISTERED PROFESSIONAL ENGINEER RENEWAL 3-31-2001 Exp. 6/30/01 MECHANICAL STATE OF CALIFORNIA

Essential Services Facility (UNDER SEPARATE DOCUMENT PACKAGE)
Parking Garage

KEY PLAN

DATE	NO.	DESCRIPTION
01-13-00	3	OVERALL PERMIT SET
11-15-99	2	OVERALL PLAN CHECK SET
10-18-99	1	PROGRESS SET

REVISIONS
DRAWN BY CEB
CHECKED BY

Parking Garage
City of Stockton, California

DRAWING
EQUIPMENT SCHEDULE AND LEDGEND

PROJECT NO. 98113
CADFILE M0_01
DATE 11 NOVEMBER 1999
DRAWING NO. M0.1G

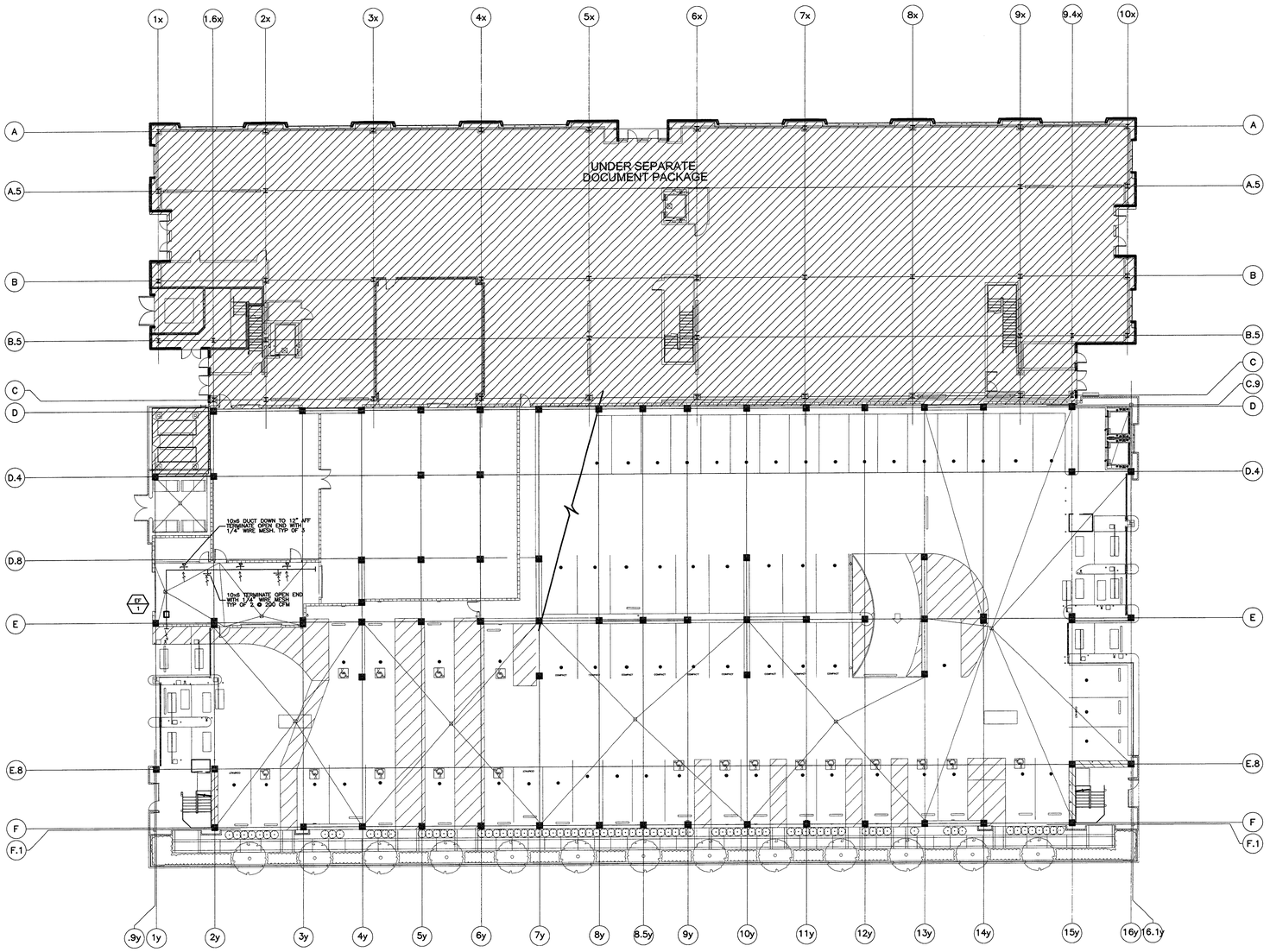

GROUND LEVEL PARKING PLAN
SCALE: 1/16"=1'-0"

This set of plans and calculations MUST be kept on the job at all times and it is unlawful to make any changes or alterations on same without written permission from Building Inspection, City of Stockton.

APPROVED Date _____
By _____

The stamping of this plan and specifications shall not be held to permit or to be an approval of the violation of any provisions of any Ordinance or Law. Occupancy of structure not permitted until after final approval.

JOB SITE COPY

PLANS REVIEWED BY
Precision Inspection Company
Inspection and Consulting Services
Page 54 of 79

ENGLISH HARPER RETA
ARCHITECTS

580 UNIVERSITY AVENUE
SACRAMENTO, CA 95825
SUITE 100
(916) 568-1821

THIS DRAWING IS NOT FINAL OR TO BE USED FOR CONSTRUCTION UNTIL IT IS SIGNED BY THE ARCHITECT AND THE OWNER.

ARCHITECT
EDWARD P. ENGLISH C-10399
RICHARD L. HARPER C-13830
RONALD A. RETA C- 9879

OWNER

CONTRACTOR

REGISTERED ARCHITECT
EDWARD L. HARPER
REG. 3-31-
STATE OF CALIFORNIA

Turner
Construction Company

FMB FRANK M. BOOTH DESIGN BUILD CO.
OUR PERFORMANCE BUILDS RELATIONSHIPS
CONTRACTORS LICENSE
CAL. 142219
NEV. 15940
916-784-0777
Roseville CA. 95661

PLEASE NOTE
These Drawings, Specifications and Documents have been prepared by FMB Design Build Co. for their exclusive use in accordance with section 6737.4 of the Professional Engineers Act of the State of California. FMB reserves all Rights regarding any use of these Documents.

APPROVED BY PROJECT MANAGER	APPROVED BY PROJECT ENGINEER
DESIGNED/DRAFTED BY MJ/MDE	

REGISTERED PROFESSIONAL ENGINEER
REID C. APPEL
No. 25854
Exp. 6/30/01
MECHANICAL
STATE OF CALIFORNIA

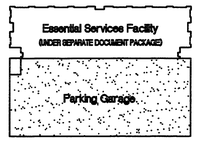

KEY PLAN

DATE	NO.	DESCRIPTION
01-13-00	3	OVERALL PERMIT SET
11-15-99	2	OVERALL PLAN CHECK SET
~~10-18-99~~	1	~~PROGRESS SET~~

REVISIONS
DRAWN BY
CHECKED BY

Parking Garage
City of Stockton, California

DRAWING
GROUND LEVEL PARKING
HVAC DESIGN

PROJECT NO. 98113
DRAWING NO. M2.01G
CADFILE M2_01G
DATE 11 NOVEMBER 1999

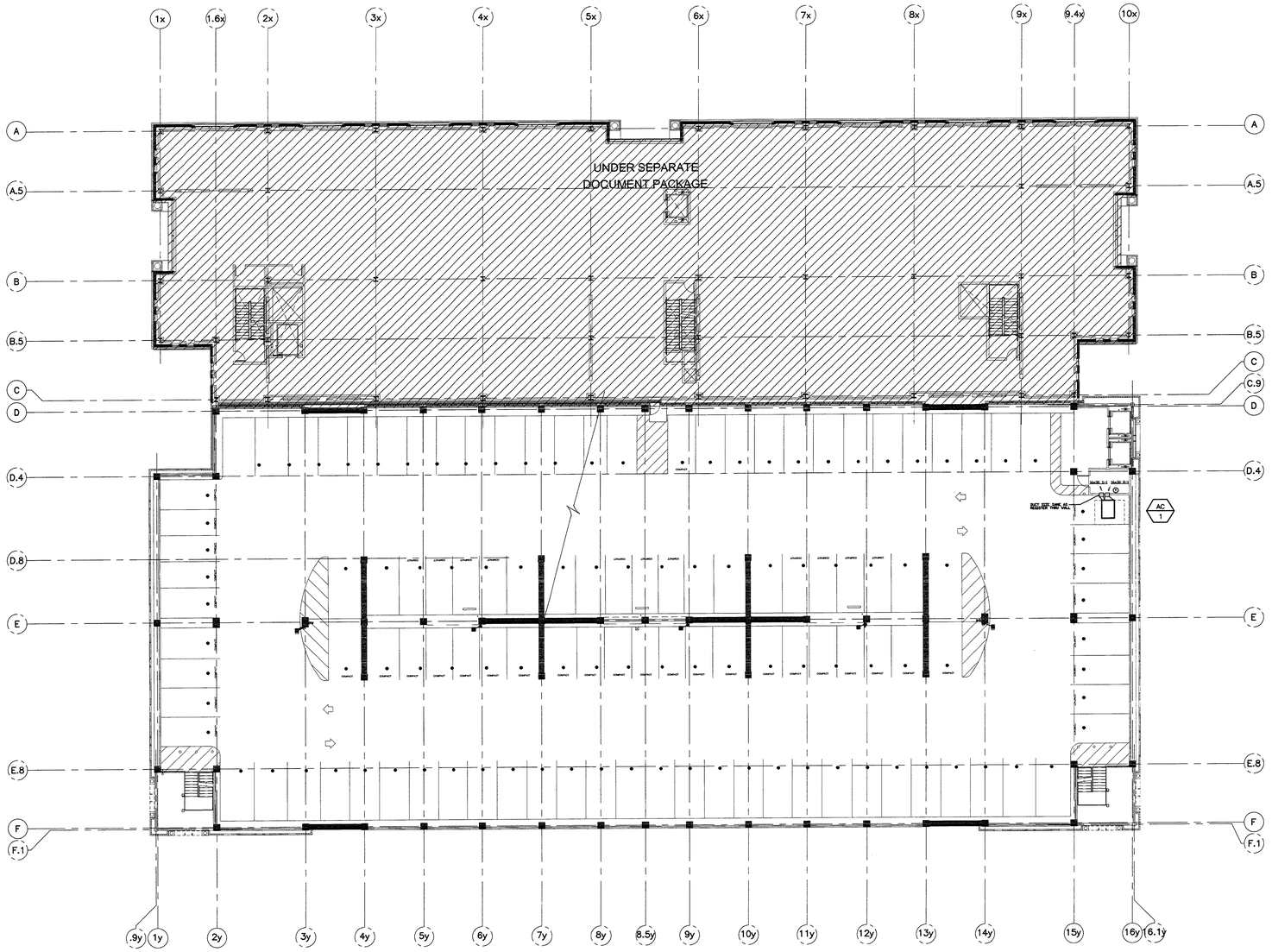

SECOND LEVEL PARKING
SCALE: 1/32"=1'-0"

This set of plans and specifications MUST be kept on the job at all times and it is [illegible]

The stamping of this plan and specifications [illegible] permit or to be an approval of the violation of any provisions of any Ordinance or Law. Occupancy or structure not permitted until after final approval.

JOB SITE COPY

PLANS REVIEWED BY
Precision Inspection Company
Inspection and Consulting Services
Page 55 of 79

ENGLISH HARPER RETA
ARCHITECTS

580 UNIVERSITY AVENUE
SACRAMENTO, CA 95825
SUITE 100
(916) 568-1821

THIS DRAWING IS NOT FINAL OR TO BE USED FOR CONSTRUCTION UNTIL IT IS SIGNED BY THE ARCHITECT AND THE OWNER.

ARCHITECT
EDWARD P. ENGLISH C-10399
RICHARD L. HARPER C-13830
RONALD A. RETA C- 9879

OWNER

CONTRACTOR

LICENSED ARCHITECT
RICHARD L. HARPER
No. C-13830
REN. 3-31-
STATE OF CALIFORNIA

Turner
Construction
Company

FMB FRANK M. BOOTH DESIGN BUILD CO.
OUR PERFORMANCE BUILDS RELATIONSHIPS
CONTRACTORS LICENSE
CAL. 142219
NEV. 15940
916-784-0777
Roseville CA. 95661

PLEASE NOTE
These Drawings, Specifications and Documents have been prepared by FMB Design Build Co. for their exclusive use in accordance with section 6737.4 of the Professional Engineers Act of the State of California. FMB reserves all Rights regarding any use of these Documents.

APPROVED BY PROJECT MANAGER	APPROVED BY PROJECT ENGINEER
DESIGNED/DRAFTED BY MJ/MDE	

REGISTERED PROFESSIONAL ENGINEER
REID C. APPEL
No. 25856
Exp. 6/30/01
MECHANICAL
STATE OF CALIFORNIA

KEY PLAN

DATE	NO.	DESCRIPTION
01-13-00	3	OVERALL PERMIT SET
11-15-99	2	OVERALL PLAN CHECK SET
~~10-18-99~~	1	~~PROGRESS SET~~

REVISIONS

DRAWN BY

CHECKED BY

Parking Garage
City of Stockton, California

DRAWING
SECOND LEVEL PARKING
HVAC DESIGN

PROJECT NO. 98113
DRAWING NO. M2.02G
CADFILE M2_02G
DATE 11 NOVEMBER 1999

PLUMBING EQUIPMENT

COUNT	TAG	MFG.	MODEL	DESCRIPTION	LOCATION	GENERAL NOTES
ELEVATOR SUMP PUMP:						
1	SP-1	PACO	PIP700A CAPACITY PUMP	SUMP PUMP 25GPM@15 FT HEAD 1/3 HP	GAR. ELEV.	SUBMERSIBLE WITH LEVEL CONTROL
SAND/OIL INTERCEPTOR:						
1	SOI-1	JENSEN	1000 EE	1000 GALLON	GARAGE	PRECAST SAND OIL INTERCEPTOR
1	SOI-2	JENSEN	750 EE	750 GALLON	GARAGE	PRECAST SAND OIL INTERCEPTOR

PLUMBING SPECIALTIES AND DRAINS

COUNT	TAG	MFG.	MODEL	DESCRIPTION	LOCATION	GENERAL NOTES
SPECIALTIES:						
18	HB-2	ZURN	HY-2850-LK -VB-PC	HOSE BIBB VACUUM BREAKER	GARAGE	LOOSE KEY
DRAINS:						
6	AD-1	ZURN	Z-534-NH	AREA DRAIN	GARAGE	12" DIAMETER PARKING DECK DRAIN
34	AD-2	ZURN	Z-533-NH	AREA DRAIN	GARAGE	9" DIAMETER PARKING DECK DRAIN
7	AD-3	ZURN	Z-550-Y-VP-NH	AREA DRAIN	GARAGE	9" DIAMETER GARAGE AREA DRAIN
	FCO	ZURN	ZN-1400	FLOOR CLEANOUT	INTERIOR	SEE PLANS FOR COUNTS AND SIZES
	GCO	ZURN	Z-1440	GRADE CLEANOUT	EXTERIOR	SEE PLANS FOR COUNTS AND SIZES

PLUMBING SANITARY FIXTURE LOADS

SANITARY FIXTURE LOADS

FIXTURE COUNT	FIXTURE TYPE	MINIMUM TRAP	OCCUPANCY USAGE	SFU EA.	SFU TOTAL
15	**WATER CLOSET - SHOWN**	3"	PUBLIC-GENERAL	5	75
	1.6 GPF FLUSHOMETER VALVE				0
16	**WATER CLOSET - FUTURE**	3"	PUBLIC-GENERAL	4	64
	1.6 GPF FLUSHOMETER VALVE				0
3	**URINAL - SHOWN**	2"	PUBLIC-GENERAL	4	12
	1.0 GPF FLUSHOMETER				0
5	**URINAL - FUTURE**	1 1/2"	PUBLIC-GENERAL	4	20
	1.0 GPF FLUSHOMETER				0
16	**LAVATORY - SHOWN**	1 1/4"	PUBLIC-GENERAL	1	16
12	**LAVATORY - FUTURE**	1 1/4"	PUBLIC-GENERAL	1	12
5	**SHOWER - SHOWN**	2"	PUBLIC-GENERAL	2	10
	PER HEAD-INDIVIDUAL				0
4	**SHOWER - FUTURE**	2"	PUBLIC-GENERAL	2	8
	PER HEAD-INDIVIDUAL				0
7	**BAR SINK - FUTURE**	1 1/2"	PUBLIC-GENERAL	2	14
2	**SINK - FUTURE**	1 1/2"	PUBLIC-GENERAL	2	4
	NO DISHWASHER				0
1	**SINK - SHOWN**	1 1/2"	PUBLIC-GENERAL	3	3
	WITH DISHWASHER				0
3	**SINK - FUTURE**	1 1/2"	PUBLIC-GENERAL	3	9
	WITH DISHWASHER				0
2	**SERVICE SINK - SHOWN**	2"	PUBLIC-GENERAL	3	6
2	**SERVICE SINK - FUTURE**	2"	PUBLIC-GENERAL	3	6
2	**DF - SHOWN**	1 1/4"	PUBLIC-GENERAL	1	1
2	**DF - FUTURE**	1 1/4"	PUBLIC-GENERAL	1	2
5	**MISC. FUTURE T.I.**		PUBLIC-GENERAL	15	75
102	FIXTURE COUNT		SUBTOTAL DRAINAGE FIXTURE UNITS		337

MISC-SANITARY FIXTURE LOADS

FIXTURE COUNT	FIXTURE TYPE	MINIMUM TRAP	OCCUPANCY USAGE	SFU EA.	SFU TOTAL
8	FLOOR DRAIN - SHOWN	2"	PUBLIC-GENERAL	2	16
6	FLOOR DRAIN - FUTURE	2"	PUBLIC-GENERAL	2	12
1	FLOOR SINK-IDW RECEPTOR	2"	PUBLIC-GENERAL	2	2
1	FLOOR SINK-IDW RECEPTOR	4"	PUBLIC-GENERAL	6	6
	HOSE BIBB - FIRST		PUBLIC-GENERAL	0	
18	HOSE BIBB - ADDITIONAL		PUBLIC-GENERAL	0	
			SUBTOTAL DRAINAGE FIXTURE UNITS		36

CONTINUOUS FLOW OUTLET DEMANDS — SANITARY FIXTURE LOADS

ITEM COUNT	FIXTURE TYPE	MINIMUM TRAP	OCCUPANCY USAGE	SFU EA.	SFU TOTAL
1	3/4" HVAC MAKE-UP		PUBLIC-GENERAL		
			SUBTOTAL DRAINAGE FIXTURE UNITS		0

TOTAL SANITARY WASTE AND VENT FIXTURE LOAD 373

PLUMBING DOMESTIC WATER FIXTURE LOADS

DW LOADS HOT AND COLD

MINIMUM FIXTURE OUTLET PIPE SIZE	WSFU EA.	WSFU TOTAL
1/2"	5.0	75.0
		0.0
1"	5.0	80.0
		0.0
3/4"	4.0	12.0
		0.0
3/4"	4.0	20.0
		0.0
1/2"	1.0	16.0
	1.0	12.0
1/2"	2.0	10.0
		0.0
1/2"	2.0	8.0
		0.0
1/2"	2.0	14.0
1/2"	1.5	3.0
		0.0
1/2"	1.5	1.5
		0.0
1/2"	1.5	4.5
		0.0
1/2"	3.0	6.0
	3.0	6.0
1/2"	0.5	1.0
1/2"	0.5	1.0
	15.0	75.0
	SUBTOTAL WFU	345

COLD BREAKOUT / HOT BREAKOUT

CFU EA.	CFU TOTAL	HFU EA.	HFU TOTAL
5.00	75.00	0.00	0.00
5.00	80.00	0.00	0.00
4.00	12.00	0.00	0.00
4.00	20.00	0.00	0.00
0.75	12.00	0.75	12.00
0.75	9.00	0.75	9.00
1.50	7.50	1.50	7.50
1.50	6.00	1.50	6.00
1.50	10.50	1.50	10.50
1.13	2.25	1.13	2.25
1.13	1.13	1.13	1.13
1.13	3.38	1.13	3.38
2.25	4.50	2.25	4.50
2.25	4.50	2.25	4.50
0.38	0.75	0.00	0.00
0.38	0.75	0.38	0.75
15.00	75.00	5.25	26.25
CFU	324	HFU	88

MISC. DW FIX LOADS HOT AND COLD

MINIMUM FIXTURE OUTLET PIPE SIZE	WSFU EA.	WSFU TOTAL
	0.0	0.0
	0.0	0.0
	0.0	0.0
	0.0	0.0
1/2"	2.5	2.5
1/2"	1.0	18.0
	SUBTOTAL WFU	21

COLD BREAKOUT / HOT BREAKOUT

CFU EA.	CFU TOTAL	HFU EA.	HFU TOTAL
0.00	0.00	0.00	0.00
0.00	0.00	0.00	0.00
0.00	0.00	0.00	0.00
0.00	0.00	0.00	0.00
2.50	2.50	0.00	0.00
1.00	18.00	0.00	0.00
CFU	21	HFU	0

DOMESTIC WATER FIXTURE LOADS HOT AND COLD

MINIMUM FIXTURE OUTLET PIPE SIZE	GPM EA.	GPM TOTAL
	7	7
	CONTINUOUS FLOW GPM	7

COLD BREAKOUT / HOT BREAKOUT

CGPM EA.	CGPM TOTAL	HGPM EA.	HGPM TOTAL
7.00	7.00	0.00	0.00
CGPM	7	HGPM	0

TOTAL H&C FIXTURE UNIT LOAD 366
SUPPLY H&C FU - GPM CONVERSION 121

CONTINUOUS FLOW GPM TOTAL 7

TOTAL HOT, COLD, AND CONTINUOUS DOMESTIC WATER DEMAND 128

	CFU	345	HFU 88
	CGPM	117	HGPM 43
	CGPM	7	HGPM 0
	COLD	124	HOT 43

PLUMBING LEGEND

———	SANITARY SOIL OR WASTE LINE --- SS OR W
— — — —	SANITARY VENT--- V
———	COLD WATER LINE --- CW
— - — -	HOT WATER LINE --- HW
— — — —	HOT WATER RETURN --- H.W. RET.
x x x	PIPING OR EQUIPMENT TO BE REMOVED
RWL	RAINWATER LEADER
OF	OVERFLOW--OF
G	GAS
	UNION--UN
CD	CONDENSATE DRAIN --- CD
SD	SECONDARY DRAIN LINE
PD	PUMPED DISCHARGE
R (D)	RISE OR (DROP) IN DIRECTION OF FLOW
	REDUCER--RED.
	CHECK VALVE --- CK.V.
	GATE VALVE --- GV
V VR VTR	VENT, VENT RISER, VENT THRU ROOF
RPBP	REDUCED PRESSURE BACKFLOW PREVENTER
RD, OF	ROOF DRAIN
CW	COLD WATER
HW	HOT WATER
GCO FCO	GRADE CLEANOUT, FLOOR CLEANOUT
WCO	WALL CLEANOUT
CO	CLEANOUT
P & TRV	PRESSURE & TEMPERATURE RELIEF VALVE
SOV	SHUT OFF VALVE
RO	RUN-OUT
AB.C. O.H.	ABOVE CEILING, OVERHEAD
U.G. UF.	UNDERGROUND, UNDERFLOOR
R.I.	ROUGH-IN
POC	POINT OF CONNECTION
(N) (E)	NEW, EXISTING
TBR	TO BE REMOVED
(R) (D)	RISE, DROP
W.T.	WATERTIGHT
ABV	ABOVE
I.E.	INVERT ELEVATION

CPC APPENDIX "A" WATER SUPPLY SYSTEM SIZING - FROM MAIN BLDG.

BASIC INFORMATION:

1.	MAXIMUM WATER DEMAND:	128	GPM	366	FIX UNITS @ FIXTURES		
	(OFF PEAK TIMERS):	0	GPM	0	GPM @ IRRIGATION		
	TOTAL:	128	GPM	366	FIXTURE UNITS		
2.	AVAILABLE WATER PRESSURE:	50	CITY MAIN	0 ft	ELEV.		
3.	PRESSURE DROP @ METER:	10.0	PSI @	128	GPM	2"	METER
4.	PRESSURE DROP @ RPBP:	11.0	PSI @	128	GPM	2"	RPBP
5.	RESIDUAL PRESS. REQUIRED:	25.0	PSI @	51 ft	ELEV. @ HIGHEST FIXTURE		
6.	STATIC DIFF. @ HIGH FIXTURE:	-22.1	PSI @	51 ft	@.454 LB/FT LOSS/GAIN		
7.	TOTAL PRESSURE LOSSES: (Total Lines 3 through 6):	-68.1	PSI @	51 ft	ELEV.		
8.	PRESSURE DIFFERENTIAL:	-18.1	RESIDUAL PRESSURE AVAIABLE AFTER LOSSES/GAINS				

BOOSTER PUMP CALCULATIONS:

9.	STATIC PRESSURE @ LOAD:	29.0	@ BOOSTER	0 ft	INLET ELEV. (MUST BE POSITIVE)		
	After Meter/Elev. Losses - For Determining Booster Location/Floor Level if Required:						
10.	STATIC PRESS. @ HIGH FIXTURE:	-22.1	PSI @	51 ft	@.454 LB/FT LOSS/GAIN		
11.	TOTAL PRESSURE LOSSES: (Total Lines 5 and 10)	-47.1	PSI @	51 ft	@ MAX LOAD 128	GPM	
12.	PRESSURE DIFFERENTIAL:	36.0	PSI @	51 ft	HEAD @ 128	GPM	
13.	BOOSTER PUMP OUTLET:	65.0	PSI				

PRESSURE DROP/100 FEET OF PIPE CALCULATIONS

16.	PRESS./ELEVATION/SOURCE:	65.0	PSI @	0 ft	ELEV. @	BOOSTER	AS SOURCE
	(1=Yes)	1	BOOSTER	0	BOOSTER		
17.	STATIC PRESS. @ HIGH FIX:	-22.1	PSI @	51 ft	ELEV. @	4TH	FLOOR
18.	TOTAL PRESSURE LOSSES: (Total Lines 3&4 as Required, 5 and 17)	-47.1	PSI @	51 ft	@ MAX LOAD	128	GPM
19.	PRESSURE AVAILABLE: (Line 16 Less Line 18)	17.9	PSI AVAILABLE FOR FRICTION LOSS IN PIPE				
20.	DEVELOPED LENGTH TO MOST REMOTE FIXTURE:			670 ft	FROM	BOOSTER	AS SOURCE
21	30% ALLOWANCE FOR FRICTION LOSS IN FITTINGS:			201 ft			
22.	TOTAL EQUIVALENT LENGTH OF BRANCH OR MAIN:			871 ft	SYSTEM	MAIN	
23.	PRESS. DROP PER 100 FEET:	2.05	PSI MAXIMUM		(Line 19/Line 22x100)		

CPC APPENDIX "A" WATER SUPPLY SYSTEM SIZING

"FAIRLY SMOOTH" PIPE CHARTS

#2	CALCULATED FRICTION LOSS (LB PER SQ FT PER 100 FT LENGTH)									
PIPE SIZE INCH	1/2	3/4	1	1 1/4	1 1/2	2	2 1/2	3	4	6
GPM	2	4	8	16	23	45	73	135	260	760
FT/SEC	2	3	3	4	4	5	5	6	7	9
FL TNK	3	5	11	22	36	105	242	555	1420	9000
FL VAV	0	0	2	3	7	37	120	452	1420	9000

CPC TABLE 11-1 & 11-2 RAINWATER SYSTEM SIZING

2" RAIN ALL CHART

2"	VERTICAL PIPING AND DRAINS - SQ. FOOTAGE ALLOWED									
PIPE SIZE INCH		2	3	4	5	6	8	10	12	15
SQ.FT.		1,088	3,220	6,920	12,560	20,400	44,000			

2"	HORIZONTAL PIPING @ 1/8"/FT FALL - SQ. FOOTAGE ALLOWED									
PIPE SIZE INCH		2	3	4	5	6	8	10	12	15
SQ.FT.			1,644	3,760	6,680	10,700	23,000	41,400	66,600	119,000

2"	HORIZONTAL PIPING @ 1/4"/FT FALL - SQ. FOOTAGE ALLOWED									
PIPE SIZE INCH		2	3	4	5	6	8	10	12	15
SQ.FT.			2,320	5,300	9,440	15,100	32,600	58,400	94,000	168,000

2"	HORIZONTAL PIPING @ 1/2"/FT FALL - SQ. FOOTAGE ALLOWED									
PIPE SIZE INCH		2	3	4	5	6	8	10	12	15
SQ.FT.			3,288	7,520	13,360	21,400	46,000	85,800	133,200	238,000

STORM INTERCEPTOR SIZING - SOI-1

1. BUILDING TYPE: PARKING GARAGE

2. TANK DESIGN: DESIGN FOR NO OVERFLOW OR BACKUP OF TANKAGE
SIZING BASED ON AVERAGE RAINFALL RATE FOR REGION, NOT MAX RATE
DECENT VELOCITY MUST BE AT LEAST EQUAL TO SURFACE LOADING RATE

4. REGIONAL DATA: AVERAGE RAINFALL(AR): 0.75 AVERAGE INCHES PER STORM EVENT
14 AVERAGE HOURS PER STORM EVENT
RAINFALL INTENSITY (RI): 2.00 INCHES PER HOUR

5. PROJECT DATA: SURFACE AREA (AC): 0.68 ACRES 29,785 SQ.FT.
PARTICALS (C): 0.90 CONCRETE, ASPHALT, BUILT UP ROOFS
NET HEAD (H): 4.50 ft 11.30 ftFF EL 6.80 ftOUTLET INV

6. TANK SIZING: CALCULATE AVERAGE FLOW THROUGH TANK: Q ()
Q = C x AR x AC 0.46 CFS (INFLOW IN CUBIC FEET PER SEC.)

TANK MINIMUM REQUIREMENTS:
1. Td = (DETENTION TIME) - 5 MINUTES MINIMUM RECOMMENDED
2. Vs = (SURFACE LOADING RATE) - LESS THAN 60 FEET PER HOUR

SOI-1 STORM TANK SELECTION: 1000 GALLONS - SIZED PER JENSEN TABLE 1

TABLE 1 VALUES:		INTERPOLATE:	
0.40 Q	0.60 Q	0.46 Q	(CFS CALCULATED)
5.57 Td	3.71 Td	5.00 (Td)	> OR = 5 MINUTES
42.00 Vs	63.00 Vs	48.46 (Vs)	< OR = 60 FEET PER HOUR

CALCULATE ORFICE THROUGH TANK: P()
Q = C x RI x AC 1.23 CFS (INFLOW IN CUBIC FEET PER SEC.)

ORFICE SELECTION (P2): 6.0 in PIPE SIZED PER JENSEN TABLE 2
0.20 > OR = (SF) CALCULATED BELOW

TABLE 2

Q	H 4.00 SF	H 4.50 SF	H 4.50 SF	
0.00	0.00	0.00	0.00	(H) = 4.50 FEET NET HEAD
1.23	0.13	0.12	0.12	(Q) = 1.23 CFS (CALCULATED)
2.00	0.21	0.20	0.20	(SF) = 0.12 MINIMUM PIPE FLOW

INLET (P1)/OUTLET(P3) 8.0 in PIPE SIZED PER CPC - SEE PLANS

STORM INTERCEPTOR SIZING - SOI-2

5. PROJECT DATA: SURFACE AREA (AC): 0.48 ACRES 20,870 SQ.FT.
PARTICALS (C): 0.90 CONCRETE, ASPHALT, BUILT UP ROOFS
NET HEAD (H): 4.50 ft 11.30 ftFF EL 6.80 ftOUTLET INV

6. TANK SIZING: CALCULATE AVERAGE FLOW THROUGH TANK: Q ()
Q = C x AR x AC 0.32 CFS (INFLOW IN CUBIC FEET PER SEC.)

TANK MINIMUM REQUIREMENTS:
1. Td = (DETENTION TIME) - 5 MINUTES MINIMUM RECOMMENDED
2. Vs = (SURFACE LOADING RATE) - LESS THAN 60 FEET PER HOUR

SOI-2 STORM TANK SELECTION: 750 GALLONS - SIZED PER JENSEN TABLE 1

TABLE 1 VALUES:		INTERPOLATE:	
0.20 Q	0.40 Q	0.32 Q	(CFS CALCULATED)
8.36 Td	4.18 Td	7.07 (Td)	> OR = 5 MINUTES
27.00 Vs	55.00 Vs	35.62 (Vs)	< OR = 60 FEET PER HOUR

CALCULATE ORFICE THROUGH TANK: P()
Q = C x RI x AC 0.86 CFS (INFLOW IN CUBIC FEET PER SEC.)

ORFICE SELECTION (P2): 6.0 in PIPE SIZED PER JENSEN TABLE 2
0.20 > OR = (SF) CALCULATED BELOW

TABLE 2

Q	H 4.00 SF	H 4.50 SF	H 4.50 SF	
0.00	0.00	0.00	0.00	(H) = 4.50 FEET NET HEAD
0.86	0.09	0.09	0.09	(Q) = 0.86 CFS (CALCULATED)
2.00	0.21	0.20	0.20	(SF) = 0.09 MINIMUM PIPE FLOW

INLET (P1)/OUTLET(P3) 8.0 in PIPE SIZED PER CPC - SEE PLANS

GENERAL NOTES

1. ENTIRE INSTALLATION SHALL CONFORM TO THE REQUIREMENTS OF THE CALIFORNIA PLUMBING CODE, CALIFORNIA BUILDING CODE, TITLE 24, AND ALL OTHER APPLICABLE CODES AND REGULATIONS.
2. COORDINATE PLUMBING SYSTEMS WITH WORK OF OTHER TRADES PRIOR TO ANY FABRICATION OR INSTALLATION.
3. COORDINATE LOCATIONS OF ALL ROOF OPENINGS WITH STRUCTURAL AND ARCHITECTURAL PLANS PRIOR TO ANY INSTALLATION.
4. ALL EQUIPMENT SHALL BE INSTALLED IN STRICT ACCORDANCE WITH THE EQUIPMENT MANUFACTURER'S RECOMMENDATIONS AND APPLICABLE CODES.
5. TRAP PRIMER COMPLETE WITH HALF INCH PIPING AND ISOLATION VALVE. AS REQUIRED PER. U.P.C.
6. ALL CLEANOUTS SHALL BE ACCESSIBLE AND INSTALLED PER. U.P.C. SECTIONS 707.0 AND 719.0.
7. ALL HORIZONTAL DRAINAGE PIPE SHALL SLOPE AT 1/4" PER FT. UNLESS SPECIFICALLY NOTED.

CPC CHAPTER 7 TABLE 7-5 WASTE & VENT SYSTEM SIZING

VERTICAL DRAINAGE PIPING

PIPE SIZE INCH	SLOPE	1-1/4	1-1/2	2	3	4	6	8	10	12
NOTE			2	3	4					
UNITS		1	2	16	48	256	1380	3600	5600	8400
MAX FT		45	65	85	212	300	510	750		

HORIZONTAL DRAINAGE PIPING

PIPE SIZE INCH	SLOPE	1-1/4	1-1/2	2	3	4	6	8	10	12
NOTE				3	4	5	5	5	5	5
UNITS	1/4	1	1	8	35	216	720	2640	4680	8200
UNITS	1/8					173	576	2112	3744	6560
MAX FT		UNLIMITED								

VERTICAL AND HORIZONTAL VENT PIPING

PIPE SIZE INCH	SLOPE	1-1/4	1-1/2	2	3	4	6	8	10	12
NOTE	FLAT OR		3							
UNITS	GRADED	1	8	24	84	256	1380	3600		
MAX FT	TOTAL VT	45	60	120	212	300	510	750		
MAX FT	HORIZONTAL	15	20	40	70	99	168	248		

NOTES:
1. MAXIMUM DRAINAGE UNITS DO NOT APPLY TO TRAP ARMS.
2. EXCEPT SINKS, URINALS, AND DISHWASHERS.
3. EXCEPT SIX-UNIT TRAPS OR WATER CLOSETS.
4. NOT TO EXCEDE (4) WATER CLOSETS OR SIX-UNIT TRAPS ON VERTICAL STACK, (3) ON HORIZONTAL BRANCH.
5. UNITS BASED ON 1/4 in/ft, REDUCE CAPACITIES TO 80% FOR 1/8 in/ft ON SIZES 4" AND LARGER.

FIXTURE AND EQUIPMENT SCHEDULE
SCALE:NONE

PLANS REVIEWED BY Pacific Inspection Company
Construction and Consulting Services
Page 56 of 59

ENGLISH HARPER RETA
ARCHITECTS

580 UNIVERSITY AVENUE SUITE 100
SACRAMENTO, CA 95825 (916) 568-1821

THIS DRAWING IS NOT FINAL OR TO BE USED FOR CONSTRUCTION UNTIL IT IS SIGNED BY THE ARCHITECT AND THE OWNER.

ARCHITECT
EDWARD P. ENGLISH C-10399
RICHARD L. HARPER C-13830
RONALD A. RETA C- 9879

OWNER

CONTRACTOR

LICENSED ARCHITECT RONALD A. RETA No. C-9879 EXP. 8-31-01 STATE OF CALIFORNIA

Turner Construction Company

FMB FRANK M. BOOTH DESIGN BUILD CO.
OUR PERFORMANCE BUILDS RELATIONSHIPS ®
CONTRACTORS LICENSE CAL. 142219 NEV. 15940
916-784-0777 Roseville CA. 95661

PLEASE NOTE
These Drawings, Specifications and Documents have been prepared by FMB Design Build Co. for their exclusive use in accordance with section 6737.4 of the Professional Engineers Act of the State of California. FMB reserves all Rights regarding any use of these Documents.

APPROVED BY PROJECT MANAGER | APPROVED BY PROJECT ENGINEER
DESIGNED/DRAFTED BY MJ/MDE

This set of plans and calculations MUST be kept on the job at all times and it is unlawful to make any changes or alterations on same without written permission from Building Inspection, City of Stockton.
APPROVED Date
By Permit No.
This stamping of this plan and specifications SHALL NOT be held to permit or to be an approval of the violation of any provisions of any Ordinance or Law. Occupancy of structure not permitted until final approval.

JOB SITE COPY

Essential Services Facility (UNDER SEPARATE DOCUMENT PACKAGE)
Parking Garage

KEY PLAN

DATE	NO.	DESCRIPTION
01-13-00	3	OVERALL PERMIT SET
11-15-99	2	OVERALL PLAN CHECK SET
10-18-99	1	PROGRESS SET

REVISIONS
DRAWN BY
CHECKED BY

Parking Garage
City of Stockton, California

DRAWING
FIXTURE AND EQUIPEMENT SCHEDULE

PROJECT NO. 98113
DRAWING NO. P0-1G
CADFILE PO-1G
DATE 11 NOVEMBER 1999

PLAN NOTES

1. P.O.C. TO SITE UTILITY @ 5'-0" OUT FROM FND.
2. SHUT OFF VALVE IN ACCESS PANEL.
3. 1 1/2" FUTURE DCW P.O.C.

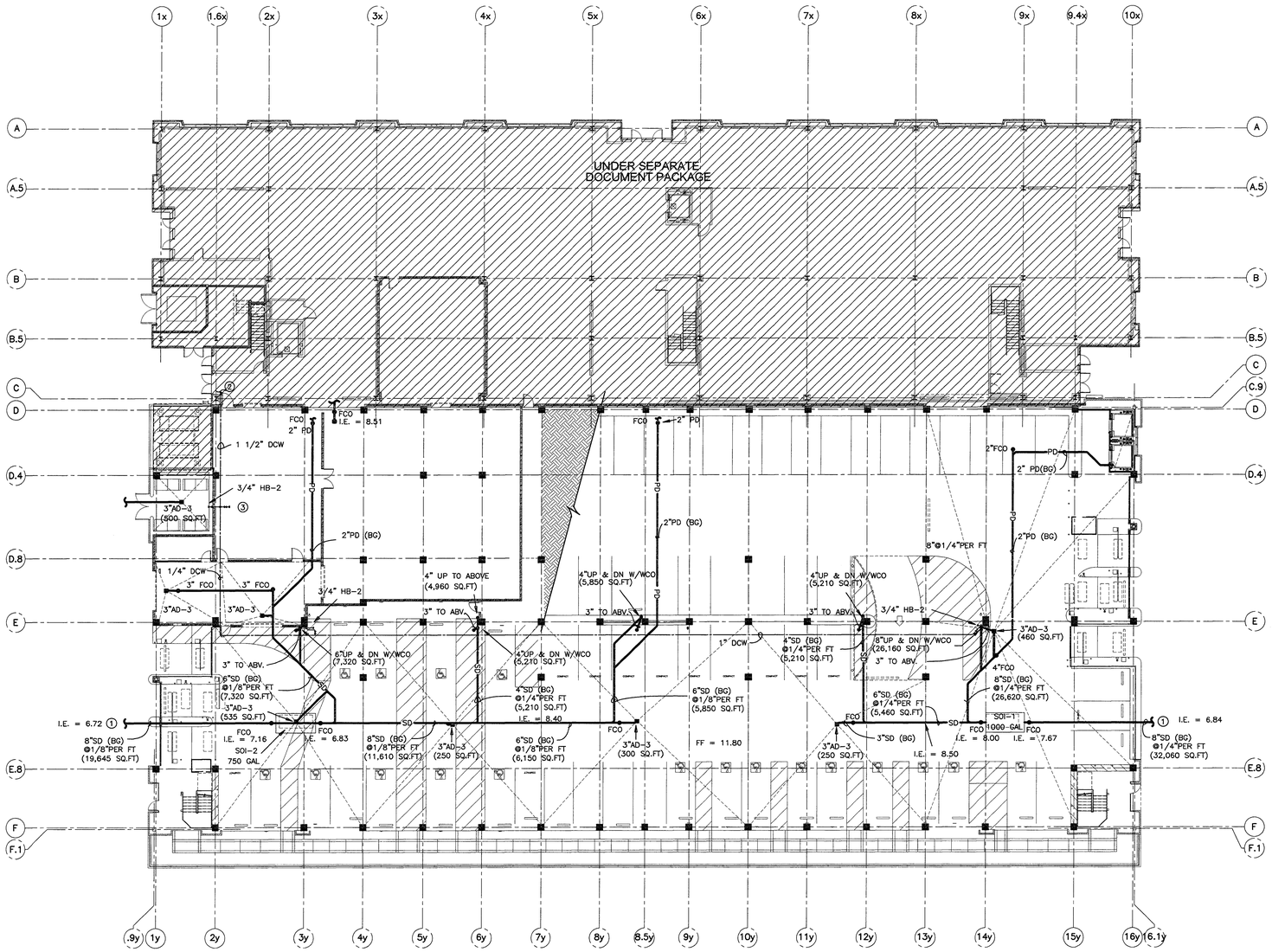

GROUND LEVEL PARKING PLAN

SCALE: 1/16"=1'-0"

This set of plans and specifications MUST be kept on the job at all times and the building permit card posted as required by law. Neither the approval nor a copy thereof shall be changed or altered without authority.

APPROVED DATE

By

The stamping of this plan is not permission to violate any law, ordinance or regulation. It is not to be construed as permitting the omission of any permit or to do an approval of any violation of any provision of any Ordinance or Law. Occupancy of structure not permitted until after final approval.

JOB SITE COPY

PLANS REVIEWED BY
Precision Inspection Company
Inspection and Consulting Services
Page 51 Of 114

ENGLISH HARPER RETA
ARCHITECTS

580 UNIVERSITY AVENUE SUITE 100
SACRAMENTO, CA 95825 (916) 568-1821

THIS DRAWING IS NOT FINAL OR TO BE USED FOR CONSTRUCTION UNTIL IT IS SIGNED BY THE ARCHITECT AND THE OWNER.

ARCHITECT
EDWARD P. ENGLISH C-10399
RICHARD L. HARPER C-13830
RONALD A. RETA C- 9879

OWNER

CONTRACTOR

LICENSED ARCHITECT RONALD A. RETA REG. NO. C-9879 EXP. 3-31- STATE OF CALIFORNIA

Turner Construction Company

FMB FRANK M. BOOTH DESIGN BUILD CO.
OUR PERFORMANCE BUILDS RELATIONSHIPS ®
CONTRACTORS LICENSE CAL. 142219 NEV. 15940
916-784-0777 Roseville CA. 95661

PLEASE NOTE
These Drawings, Specifications and Documents have been prepared by FMB Design Build Co. for their exclusive use in accordance with section 6737.4 of the Professional Engineers Act of the State of California. FMB reserves all Rights regarding any use of these Documents.

APPROVED BY PROJECT MANAGER	APPROVED BY PROJECT ENGINEER
DESIGNED/DRAFTED BY MJ/ADE	

REGISTERED PROFESSIONAL ENGINEER RICHARD L. HARPER No. 13830 Exp. 6/30/01 MECHANICAL STATE OF CALIFORNIA

Essential Services Facility (UNDER SEPARATE DOCUMENT PACKAGE)
Parking Garage

KEY PLAN

01-13-00	3	OVERALL PERMIT SET
11-15-99	2	OVERALL PLAN CHECK SET
10-18-99	1	PROGRESS SET

DATE NO. DESCRIPTION

REVISIONS

DRAWN BY

CHECKED BY

Parking Garage
City of Stockton, California

DRAWING
GROUND LEVEL PARKING PLUMBING PLAN

PROJECT NO. 98113
DRAWING NO. P2.01G
CADFILE P2_01G
DATE 11 NOVEMBER 1999

PLAN NOTES

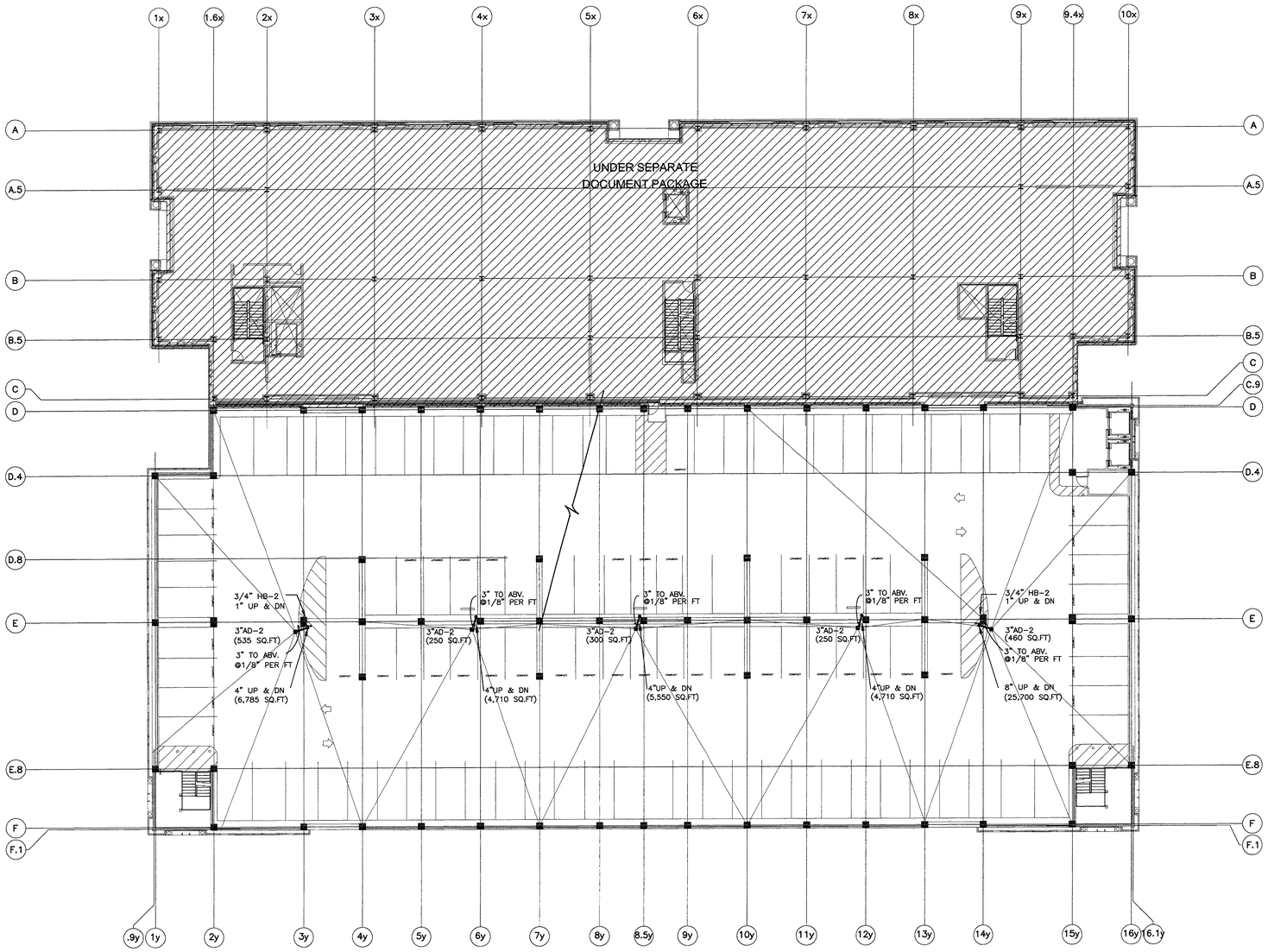

SECOND LEVEL PARKING
SCALE: 1/32"=1'-0"

This set of plans and calculations MUST be kept on the job at all times and it is unlawful to make any changes or alterations on same without written permission from Building Inspection, City of Stockton.

APPROVED Date _____

By _____ Permit No. _____

The stamping of this plan and specifications SHALL NOT be held to permit or to be an approval of the violation of any provisions of any Ordinance or Law. Occupancy of structure not permitted until after final approval.

JOB SITE COPY

PLANS REVIEWED BY
Precision Inspection Company
Inspection and Consulting Services
Page 58 of 79

ENGLISH HARPER RETA
ARCHITECTS

580 UNIVERSITY AVENUE SUITE 100
SACRAMENTO, CA 95825 (916) 568-1821

THIS DRAWING IS NOT FINAL OR TO BE USED FOR CONSTRUCTION UNTIL IT IS SIGNED BY THE ARCHITECT AND THE OWNER.

ARCHITECT
EDWARD P. ENGLISH C-10399
RICHARD L. HARPER C-13830
RONALD A. RETA C- 9879

OWNER

CONTRACTOR

LICENSED ARCHITECT
RICHARD L. HARPER
C-13830
REN. 3-31-
STATE OF CALIFORNIA

Turner Construction Company

FMB FRANK M. BOOTH DESIGN BUILD CO.
OUR PERFORMANCE BUILDS RELATIONSHIPS
CONTRACTORS LICENSE CAL. 142219 NEV. 15940
916-784-0777 Roseville CA. 95661

PLEASE NOTE
These Drawings, Specifications and Documents have been prepared by FMB Design Build Co. for their exclusive use in accordance with section 6737.4 of the Professional Engineers Act of the State of California. FMB reserves all Rights regarding any use of these Documents.

APPROVED BY PROJECT MANAGER	APPROVED BY PROJECT ENGINEER
DESIGNED/DRAFTED BY MJ/MDE	

REGISTERED PROFESSIONAL ENGINEER
REID C. APPEL
No. 25856
Exp. 6/30/01
MECHANICAL
STATE OF CALIFORNIA

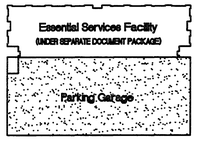

KEY PLAN

DATE	NO.	DESCRIPTION
01-13-00	3	OVERALL PERMIT SET
11-15-99	2	OVERALL PLAN CHECK SET
10-18-99	1	PROGRESS SET

REVISIONS

DRAWN BY

CHECKED BY

Parking Garage
City of Stockton, California

DRAWING
SECOND LEVEL PARKING
PLUMBING PLAN

PROJECT NO. 98113
DRAWING NO. P2.02G
CADFILE P2_02G
DATE 11 NOVEMBER 1999

PLAN NOTES

1. NOT USED
2. NOT USED
3. NOT USED
4. RISERS AND BRANCHES TO UPPER LEVELS SIMILAR.
5. RISERS TO HB-2 @ UPPER LEVELS SIMILAR.

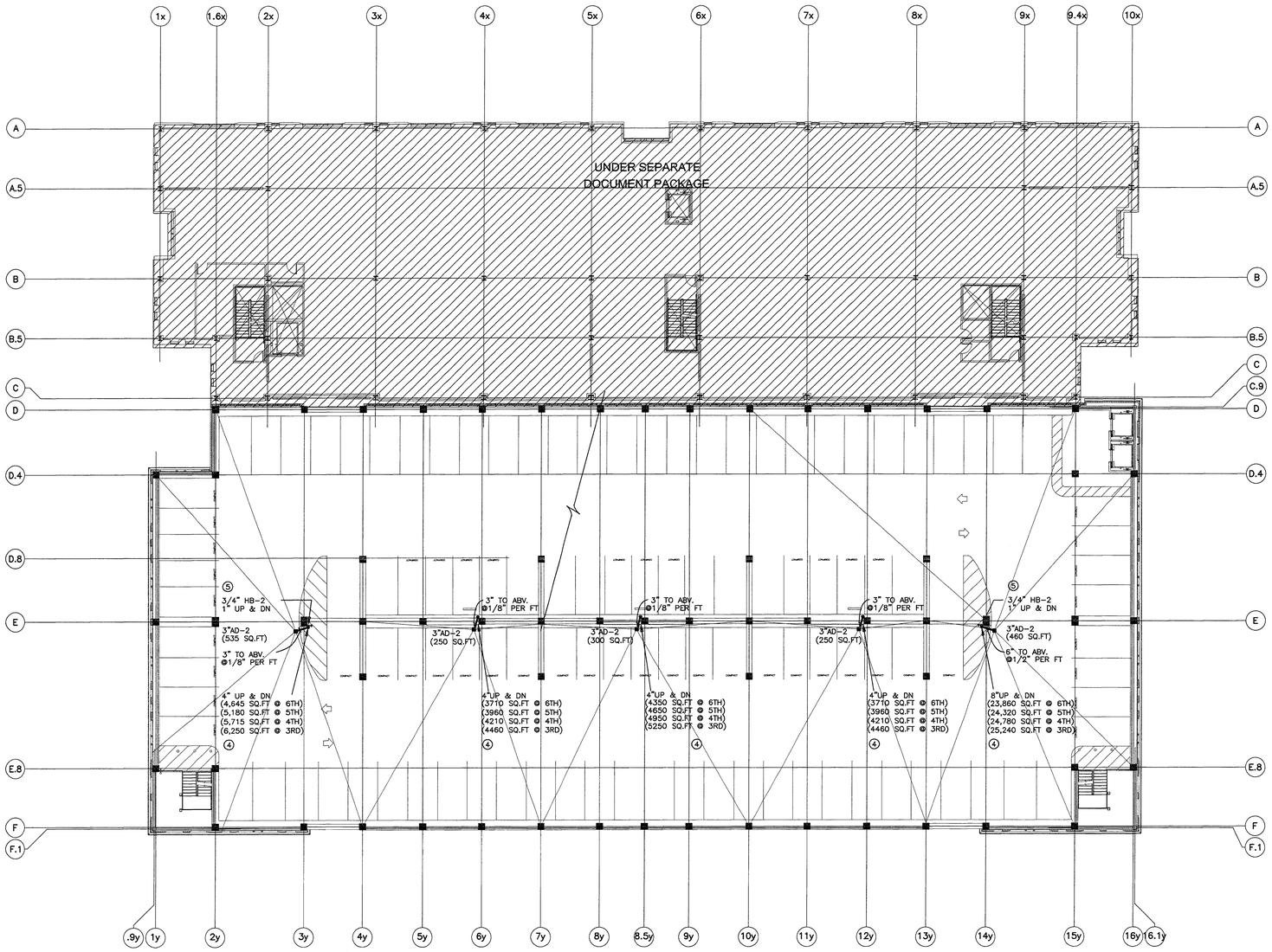

TYPICAL PARKING LEVEL
SCALE: 1/16"=1'-0"

ENGLISH HARPER RETA
ARCHITECTS

580 UNIVERSITY AVENUE SUITE 100
SACRAMENTO, CA 95825 (916) 568-1821

THIS DRAWING IS NOT FINAL OR TO BE USED FOR CONSTRUCTION UNTIL IT IS SIGNED BY THE ARCHITECT AND THE OWNER.

ARCHITECT
EDWARD P. ENGLISH C-10399
RICHARD L. HARPER C-13830
RONALD A. RETA C- 9879

OWNER

CONTRACTOR

Turner Construction Company

FMB FRANK M. BOOTH DESIGN BUILD CO.
OUR PERFORMANCE BUILDS RELATIONSHIPS
CONTRACTORS LICENSE CAL. 142219 NEV. 15940
916-784-0777 Roseville CA. 95661

PLEASE NOTE
These Drawings, Specifications and Documents have been prepared by FMB Design Build Co. for their exclusive use in accordance with section 6737.4 of the Professional Engineers Act of the State of California. FMB reserves all Rights regarding any use of these Documents.

APPROVED BY PROJECT MANAGER	APPROVED BY PROJECT ENGINEER
DESIGNED/DRAFTED BY MJ/MDE	

REGISTERED PROFESSIONAL ENGINEER
REID C. APPEL
No. 23856
Exp. 6/30/01
MECHANICAL
STATE OF CALIFORNIA

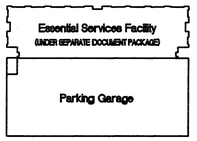

KEY PLAN

DATE	NO.	DESCRIPTION
01-13-00	3	OVERALL PERMIT SET
11-15-99	2	OVERALL PLAN CHECK SET
10-18-99	1	PROGRESS SET

REVISIONS

DRAWN BY

CHECKED BY

Parking Garage
City of Stockton, California

DRAWING
TYPICAL LEVEL PARKING PLUMBING PLAN

PROJECT NO. 98113
DRAWING NO. P2.03G
CADFILE P2_03G
DATE 11 NOVEMBER 1999

This set of plans and calculations MUST be kept on the job at all times and is not to be used for any purpose or purchase or sale of any other [illegible] from Building Inspection. City of Stockton
APPROVED
By
The stamping of this plan and specifications SHALL NOT be held to permit or to be an approval of the violation of any provisions of any Ordinance or Law. Occupancy of structure not permitted until after final approval.

JOB SITE COPY

PLANS REVIEWED BY
Precision Inspection Company
Inspection and Consulting Services
Page 59 Of 79

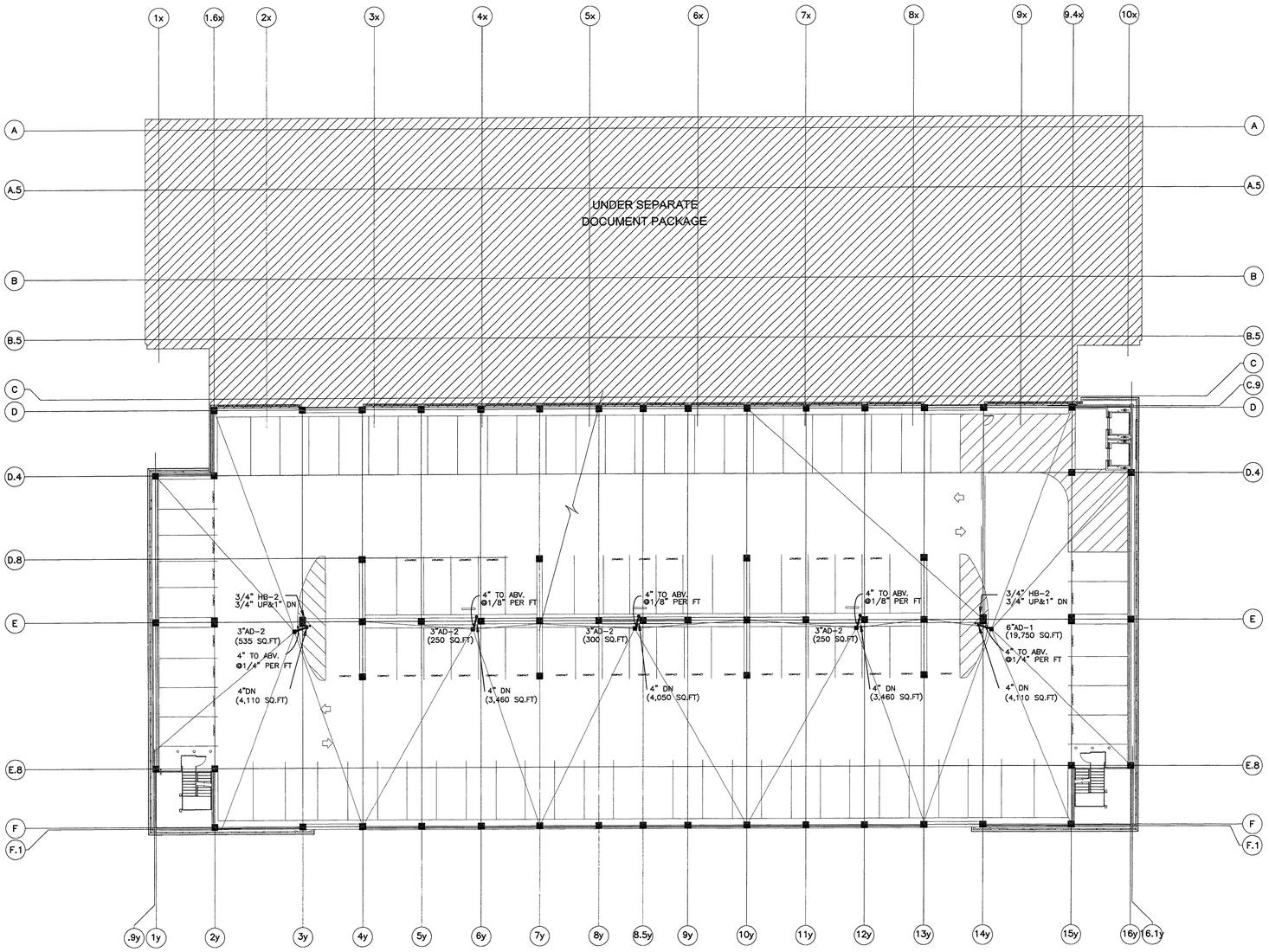

SEVENTH LEVEL PARKING
SCALE: 1/16"=1'-0"

This set of plans and specifications [illegible] are the property of the Architect and [illegible] without the written permission of the Architect.

APPROVED

By _____

The issuance of this approval shall not be held to permit or to be an approval of the violation of any provisions of any Ordinance or Law. Occupancy of structure not permitted until after final approval.

JOB SITE COPY

PLANS REVIEWED BY
Precision Inspection Company
Inspection and Consulting Services
Page 20 of 161

ENGLISH HARPER RETA
ARCHITECTS

580 UNIVERSITY AVENUE SUITE 100
SACRAMENTO, CA 95825 (916) 568-1821

THIS DRAWING IS NOT FINAL OR TO BE USED FOR CONSTRUCTION UNTIL IT IS SIGNED BY THE ARCHITECT AND THE OWNER.

ARCHITECT
EDWARD P. ENGLISH C-10399
RICHARD L. HARPER C-13830
RONALD A. RETA C- 9879

OWNER

CONTRACTOR

LICENSED ARCHITECT
RONALD A. RETA
No. C-9879
EXP. 3-31-
STATE OF CALIFORNIA

Turner
Construction
Company

FMB FRANK M. BOOTH DESIGN BUILD CO.
OUR PERFORMANCE BUILDS RELATIONSHIPS ®
CONTRACTORS LICENSE CAL. 142219 NEV. 15940
916-784-0777 Roseville CA. 95661

PLEASE NOTE
These Drawings, Specifications and Documents have been prepared by FMB Design Build Co. for their exclusive use in accordance with section 6737.4 of the Professional Engineers Act of the State of California. FMB reserves all Rights regarding any use of these Documents.

APPROVED BY PROJECT MANAGER	APPROVED BY PROJECT ENGINEER
DESIGNED/DRAFTED BY MJ/MDE	

REGISTERED PROFESSIONAL ENGINEER
REID C. APPEL
No. 25486
Exp. 6/30/01
MECHANICAL
STATE OF CALIFORNIA

Essential Services Facility
(UNDER SEPARATE DOCUMENT PACKAGE)
Parking Garage

KEY PLAN

DATE	NO.	DESCRIPTION
01-13-00	3	OVERALL PERMIT SET
11-15-99	2	OVERALL PLAN CHECK SET
10-18-99	1	PROGRESS SET

REVISIONS
DRAWN BY
CHECKED BY

Parking Garage
City of Stockton, California

DRAWING
SEVENTH LEVEL PARKING
PLUMBING PLAN

PROJECT NO. 98113
DRAWING NO. P2.04G
CADFILE P2_04G
DATE 11 NOVEMBER 1999

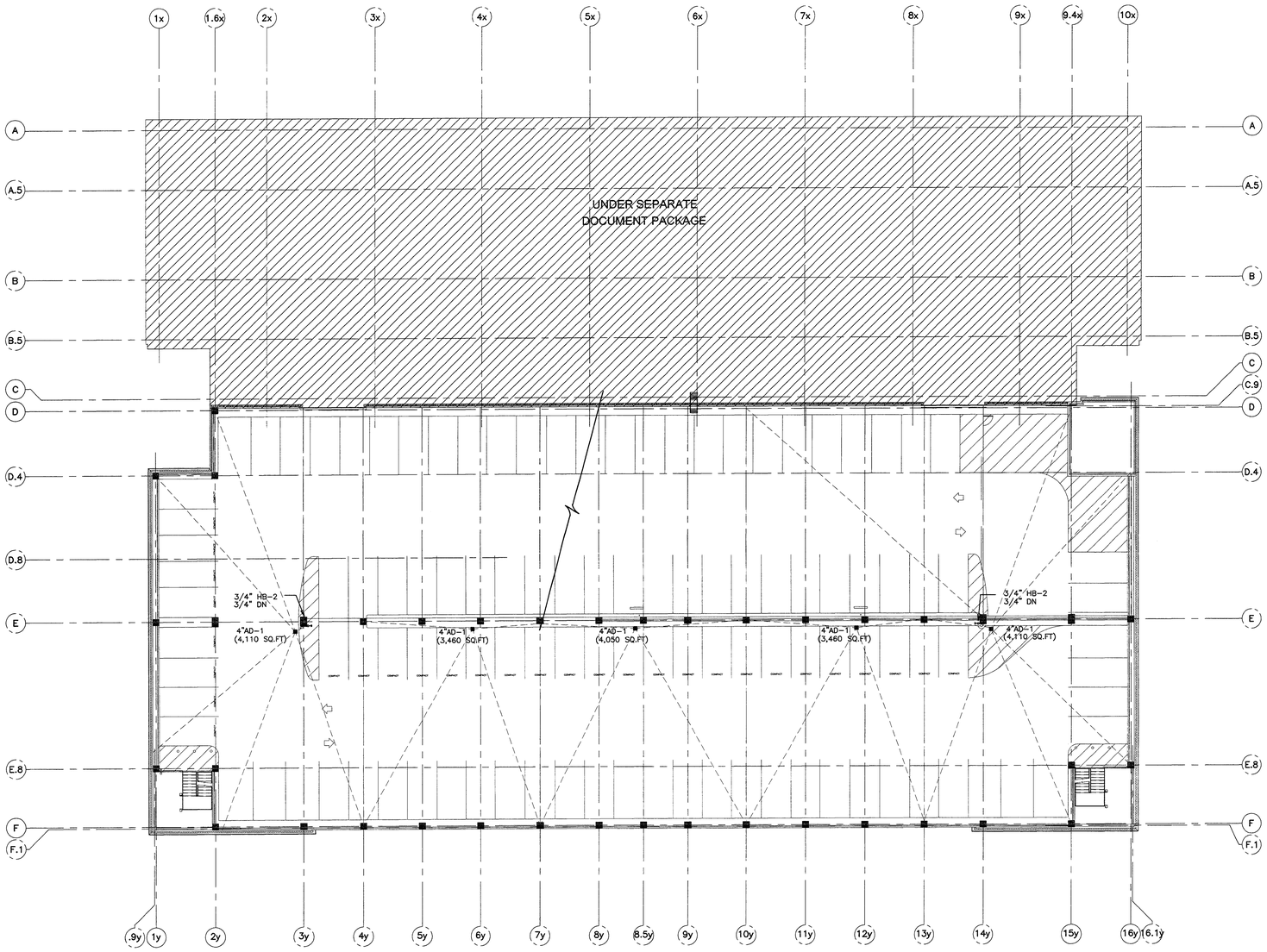

EIGHT LEVEL PARKING
SCALE: 1/16"=1'-0"

ENGLISH HARPER RETA
ARCHITECTS

580 UNIVERSITY AVENUE SUITE 100
SACRAMENTO, CA 95825 (916) 568-1821

THIS DRAWING IS NOT FINAL OR TO BE USED FOR CONSTRUCTION UNTIL IT IS SIGNED BY THE ARCHITECT AND THE OWNER.

ARCHITECT
EDWARD P. ENGLISH C-10399
RICHARD L. HARPER C-13830
RONALD A. RETA C- 9879

OWNER

CONTRACTOR

Turner Construction Company

FMB FRANK M. BOOTH DESIGN BUILD CO.
OUR PERFORMANCE BUILDS RELATIONSHIPS
CONTRACTORS LICENSE CAL. 142219 NEV. 15940
916-784-0777 Roseville CA. 95661

PLEASE NOTE
These Drawings, Specifications and Documents have been prepared by FMB Design Build Co. for their exclusive use in accordance with section 6737.4 of the Professional Engineers Act of the State of California. FMB reserves all Rights regarding any use of these Documents.

APPROVED BY PROJECT MANAGER	APPROVED BY PROJECT ENGINEER
DESIGNED/DRAFTED BY MJ/MDE	

REGISTERED PROFESSIONAL ENGINEER
REG. C. APPEL
No. 25836
Exp. 6/30/01
MECHANICAL
STATE OF CALIFORNIA

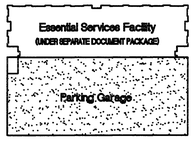

KEY PLAN

DATE	NO.	DESCRIPTION
01-13-00	3	OVERALL PERMIT SET
11-15-99	2	OVERALL PLAN CHECK SET
10-18-99	1	PROGRESS SET

REVISIONS

DRAWN BY

CHECKED BY

Parking Garage
City of Stockton, California

DRAWING
EIGHT LEVEL PARKING
PLUMBING PLAN

PROJECT NO. 98113
DRAWING NO. P2.05G
CADFILE P2_05G
DATE 11 NOVEMBER 1999

This set of plans and specifications MUST be kept on the job at all times and it is unlawful to make any changes or alterations to the same, except as the same may be modified by the Architect.

By

The stamping of this plan and specifications shall NOT be held to permit or to be an approval of the violation of any provisions of any Ordinance or Law. Occupancy of structure not permitted until after final approval.

JOB SITE COPY

PLANS REVIEWED BY
Precision Inspection Company
Inspection and Consulting Services
Page 61 of 79

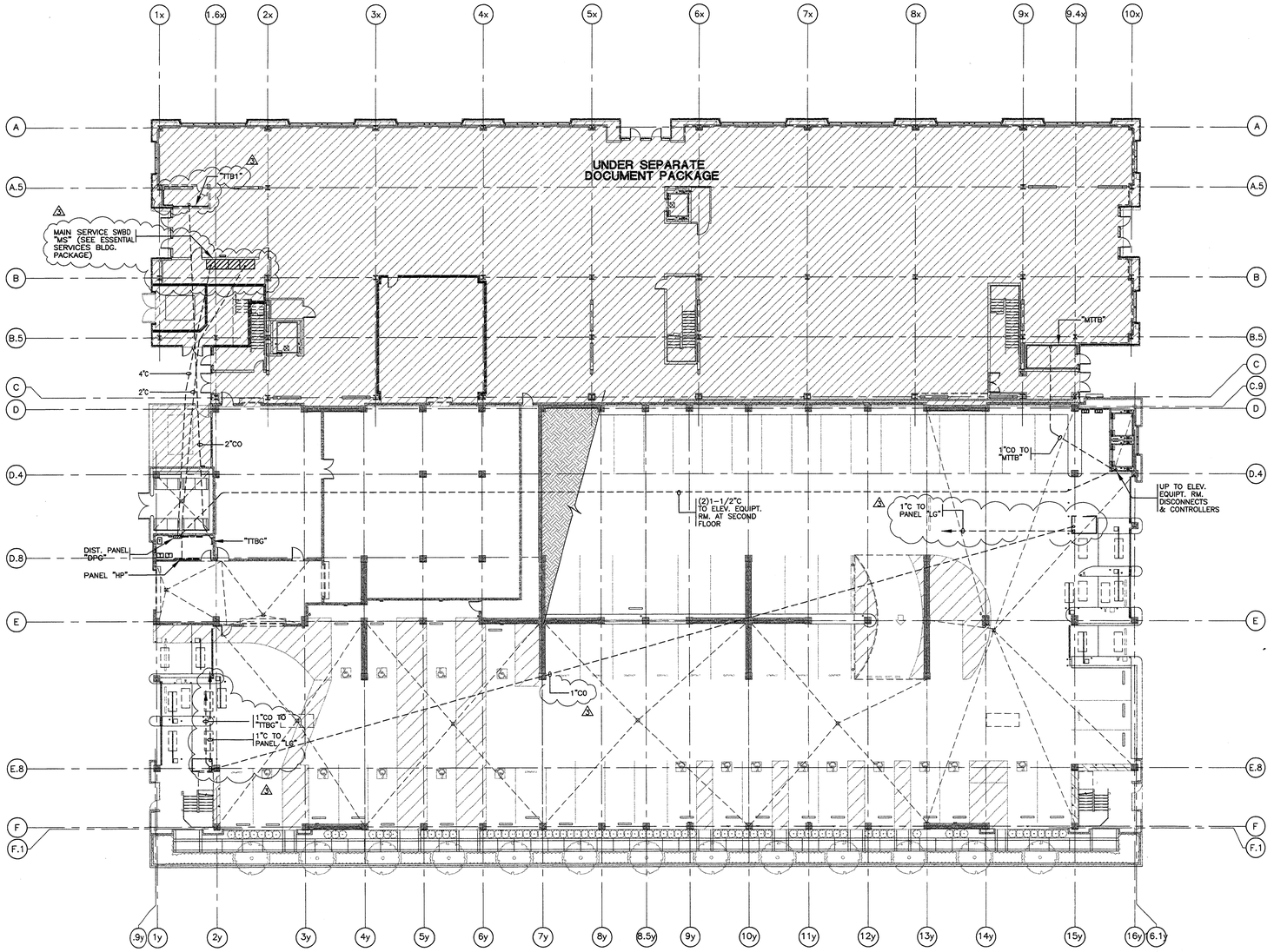

GROUND LEVEL PARKING ELECTRICAL PLAN: MASTER UNDERGROUND CONDUIT SYSTEM

SCALE: 1/16"=1'-0"

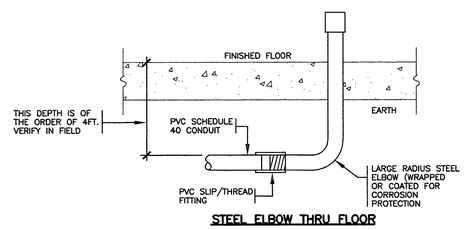

STEEL ELBOW THRU FLOOR

20 / EU0.01G

TERMINATING NON-METALLIC PVC CONDUITS

ELECTRICAL SPECIFICATIONS: UNDERGROUND CONDUIT SYSTEM

GENERAL:

1. ELECTRICAL INSTALLATION SHALL COMPLY WITH TITLE 24, CALIFORNIA CODE OF REGULATIONS, INCLUDING THE FOLLOWING:
TITLE 24, CCR, PART 2, 1997 UBC
TITLE 24, CCR, PART 3, 1996 NEC
ALL APPLICABLE LOCAL CODES.

2. ELECTRICAL CONTRACTOR SHALL PROCURE AND PAY FOR ALL LICENSES, ETC. REQUIRED TO CARRY ON AND COMPLETE THE WORK.

3. PROVIDE ALL LABOR, MATERIALS, TOOLS, PLANT EQUIPMENT, TRANSPORTATION AND PERFORM ALL OPERATIONS NECESSARY FOR ANY REASONABLE INCIDENTAL TO PROPER EXECUTION AND COMPLETION OF ALL "ELECTRICAL WORK"; ALL AS INDICATED, SPECIFIED HEREIN, AND/OR IMPLIED THEREBY TO CARRY OUT THE APPARENT INTENT THEREOF.

4. ALL ELECTRICAL MATERIALS SHALL BE NEW AND LISTED WITH THE UNDERWRITERS' LABORATORIES, INC., SHALL MEET THEIR REQUIREMENTS AND SHALL BEAR THEIR LABEL WHEREVER STANDARDS HAVE BEEN ESTABLISHED AND LABEL SERVICE IS REGULARLY FURNISHED BY THAT AGENCY.

5. ELECTRICAL DRAWINGS ARE ESSENTIALLY DIAGRAMMATIC AND ALTHOUGH THE SIZE AND LOCATIONS OF EQUIPMENT ARE SHOWN TO SCALE WHEREVER POSSIBLE, CONTRACTOR SHALL MAKE USE OF ALL DATA IN ALL CONTRACT DOCUMENTS AND VERIFY THIS INFORMATION AT THE SITE. LAY OUT ELECTRICAL WORK TO AVOID INTERFERENCE WITH OTHER TRADES.

10 / EU0.01G

6. THE UNDERGROUND CONDUIT SYSTEM SHOWN IS FOR MAJOR UNDERGROUND CONDUITS ONLY, TYPICALLY TO BE INSTALLED AT AROUND 48 INCHES BELOW FINISHED FLOOR LEVELS. THIS DEPTH IS REQUIRED IN ORDER TO CLEAR THE FOUNDATION BEAMS AND OTHER SUBTERRANEAN CONCRETE WORK. COORDINATE WITH STRUCTURAL/FOUNDATION PLANS TO DETERMINE ACTUAL LAYOUT OF CONDUIT RUNS.

MATERIALS:

1. ALL UNDERGROUND CONDUITS SHALL BE PVC SCHEDULE 40 MINIMUM.

2. ALL CONDUIT STUB-UPS SHALL BE MADE WITH LARGE RADIUS GALVANIZED RIGID STEEL CONDUIT.

PLANS REVIEWED BY
Precision Inspection Company
Inspection and Consulting Services
Page 62 Of 119

This set of plans and specifications MUST be kept on the job site at all times and is subject to return upon demand of the Building Official.

By _____ Date _____

The cleaning of this plan and specifications SHALL NOT be held to permit or to be an approval of the violation of any provisions of any Ordinance or Law. Occupancy of structure not permitted until after final approval.

SUBMITTAL COPY

ENGLISH HARPER RETA
ARCHITECTS

580 UNIVERSITY AVENUE SUITE 100
SACRAMENTO, CA 95825 (916) 568-1821

THIS DRAWING IS NOT FINAL OR TO BE USED FOR CONSTRUCTION UNTIL IT IS SIGNED BY THE ARCHITECT AND THE OWNER.

ARCHITECT
EDWARD P. ENGLISH C-10399
RICHARD L. HARPER C-13830
RONALD A. RETA C- 9879

OWNER

CONTRACTOR

LICENSED ARCHITECT EDWARD P. ENGLISH No. C-10399 REN. 3-31- STATE OF CALIFORNIA

Turner CONSTRUCTION COMPANY

HCS ENGINEERING, INC.
CONSULTING ELECTRICAL ENGINEERS
4651 QUAIL LAKES DRIVE
STOCKTON, CA 95207 (209)478-8270

PROJ. 99133 DES. CML ENG. BP

REGISTERED PROFESSIONAL ENGINEER Allen Hardash No. E 012271 Exp. 9-30-03 ELECTRICAL STATE OF CALIFORNIA

Essential Services Facility
(UNDER SEPARATE DOCUMENT PACKAGE)

KEY PLAN

1-13-2000	3	OVERALL PERMIT SET	
11-15-99	2	OVERALL PLANCHECK SET	
10-18-99	1	PROGRESS SET	
DATE	NO.	DESCRIPTION	

REVISIONS

DRAWN BY

CHECKED BY

Parking Garage
City of Stockton, California
G.M.P. BID SET

DRAWING

GROUND LEVEL PARKING ELECTRICAL PLAN: MAJOR UNDERGROUND CONDUIT SYSTEM

PROJECT NO. 98113
DRAWING NO. EU0.01G
CADFILE EU0_01G
DATE 7 SEPTEMBER 1999

1-11-00 COLLINS\ESF\LES\DO\GARAGE\EU0_01G

PANEL "HG"

TOTAL KVA : 86.9 KVA					FEEDER AMPS: 104.6 A			
MOUNTING : SURFACE					VOLTAGE : 480/277V, 3ø, 4W			
BUSSING : 225A COPPER					FEEDER : SEE ONE LINE DIAGRAM			
DESCRIPTION	LOAD	BRKR			BRKR	LOAD	DESCRIPTION	
EXIT SIGNS	.	20/1	1	2	20/1	360	LIGHTS	
GARAGE LIGHTS	3600		3	4		3240	GARAGE LIGHTS	
	2160		5	6		3240		
	2160		7	8		3240		
	1080		9	10		3240		
	3420		11	12		3420		
	3240		13	14		3240		
	3600		15	16			SPARE	
	3240		17	18				
	3240		19	20		1740	ELEV. AREA LIGHTS	
	3240		21	22		1856	BLDG. STAIRS LIGHTS	
	3240		23	24			SPARE	
SPARE			25	26				
			27	28				
			29	30				
			31	32				
			33	34				
			35	36				
		50	37	38	15			
XFMR "TG"	26969		39	40		4155	ELEV. ROOM	⊛
		3	41	42	3		AC-1	
	59.2	KVA TOTAL				27.7		

⊛ ASSUMED LOAD. VERIFY WITH HVAC CONTRACTOR

PANEL "LP"

TOTAL KVA : 4.0 KVA					FEEDER AMPS: 11.1 A			
MOUNTING : SURFACE					VOLTAGE : 120/208V, 3ø, 4W			
BUSSING : 100A 3P MCB					FEEDER : SEE ONE LINE DIAGRAM			
DESCRIPTION	LOAD	BRKR			BRKR	LOAD	DESCRIPTION	
EF-1	696	20/1	1	2	20/1	100	LIGHTING CONTROLS	
SPARE			3	4			SPARE	
			5	6				
			7	8				
			9	10				
			11	12				
			13	14				
			15	16				
			17	18				
			19	20				
			21	22				
			23	24				
			25	26				
			27	28				
			29	30				
			31	32				
			33	34				
		20	35	36	20			
		2	37	38	2			
ELECTRIC GATE MOTOR	1600	20	39	40	20	1600	ELECTRIC GATE MOTOR	
		2	41	42	2			
	2.3	KVA TOTAL				1.7		

PANEL "HP"

TOTAL KVA : 8.1 KVA					FEEDER AMPS: 9.7 A			
MOUNTING : SURFACE					VOLTAGE : 480/277V, 3ø, 4W			
BUSSING : 225A COPPER					FEEDER : SEE ONE LINE DIAGRAM			
DESCRIPTION	LOAD	BRKR			BRKR	LOAD	DESCRIPTION	
SPARE		20/1	1	2	20/1		SPARE	
ROOF LEVEL LIGHTS	1550		3	4				
	2170		5	6				
SPARE			7	8				
			9	10				
			11	12				
			13	14				
			15	16				
			17	18				
		50	19	20	70			
XFMR "TP"	3996		21	22		350	XFMR "TPE"	
		3	23	24	3			
	7.7	KVA TOTAL				0.4		

PANEL "LPE"

TOTAL KVA : 0.4 KVA					FEEDER AMPS: 1.1 A			
MOUNTING : SURFACE					VOLTAGE : 120/208V, 3ø, 4W			
BUSSING : 150A 3P MCB					FEEDER : SEE ONE LINE DIAGRAM			
DESCRIPTION	LOAD	BRKR			BRKR	LOAD	DESCRIPTION	
LIGHTS/OUTLET	350	20/1	1	2	20/1		SPARE	
SPARE			3	4				
			5	6				
			7	8				
			9	10				
			11	12				
			13	14				
			15	16				
			17	18				
			19	20				
			21	22				
			23	24				
			25	26				
			27	28				
		20	29	30	20			
		2	31	32	2			
		20	33	34	20			
		2	35	36	2			
		20	37	38	20			
			39	40				
		3	41	42	3			
	0.4	KVA TOTAL						

PANEL "LG"

TOTAL KVA : 27.0 KVA					FEEDER AMPS: 75 A			
MOUNTING : SURFACE					VOLTAGE : 120/208V, 3ø, 4W			
BUSSING : 100A 3P MCB					FEEDER : SEE ONE LINE DIAGRAM			
DESCRIPTION	LOAD	BRKR			BRKR	LOAD	DESCRIPTION	
OUTLETS - ELEV.	560	20/1	1	2	20/1	100	LIGHTING CONTROLS	
ELEV. CAB LTS.	100		3	4		1000	GARAGE SIGNS	
ELEV. CONTROLS	200		5	6		1000		
ELEV. CAB LTS.	100		7	8		360	OUTLET - TTBG	
ELEV. CONTROLS	200		9	10		360	OUTLETS	
SPARE			11	12			SPARE	
FIRE PUSH-UP DOOR	100		13	14				
FIRE PUSH-UP DOOR	100		15	16				
DUCT SMOKE DETECTOR	100		17	18				
SPARE			19	20				
			21	22				
			23	24				
			25	26		1176	SUMP PUMP SP-1	
G.O. #2	1019	20	27	28	20	1019	G.O. #5	
		2	29	30	2			
G.O. #3	1019	20	31	32	20			
		2	33	34		1728	G.O. #1	
⊛ CASHIER BOOTH	7500	50	35	36	3			
		2	37	38	20			
⊛ CASHIER BOOTH	7500	50	39	40		1728	G.O. #4	
		2	41	42	3			
	18.5	KVA TOTAL				8.5		

⊛ ASSUMED LOAD. VERIFY WITH BOOTH SUPPLIER.

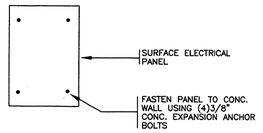

MOUNTING DETAIL: SURFACE ELECTRICAL PANEL (CONC. BLOCK WALL)
NTS

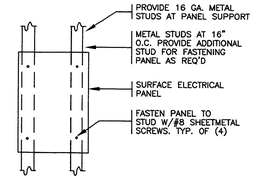

MOUNTING DETAIL: SURFACE ELECTRICAL PANEL (STUD WALL)
NTS

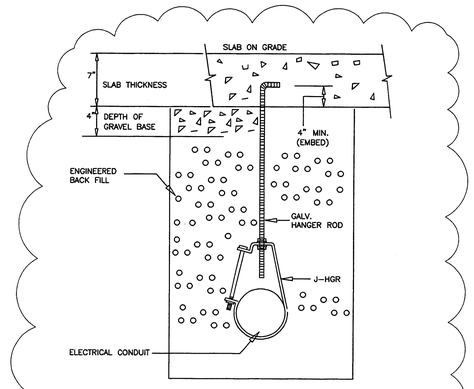

UNDERSLAB CONDUIT HANGER DETAIL
NTS

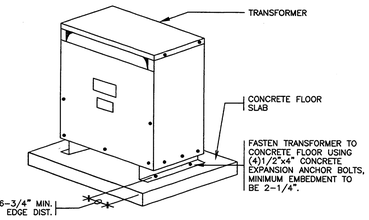

MOUNTING DETAIL: PAD MOUNT TRANSFORMERS "TG", "TP" & "TPE"
NTS

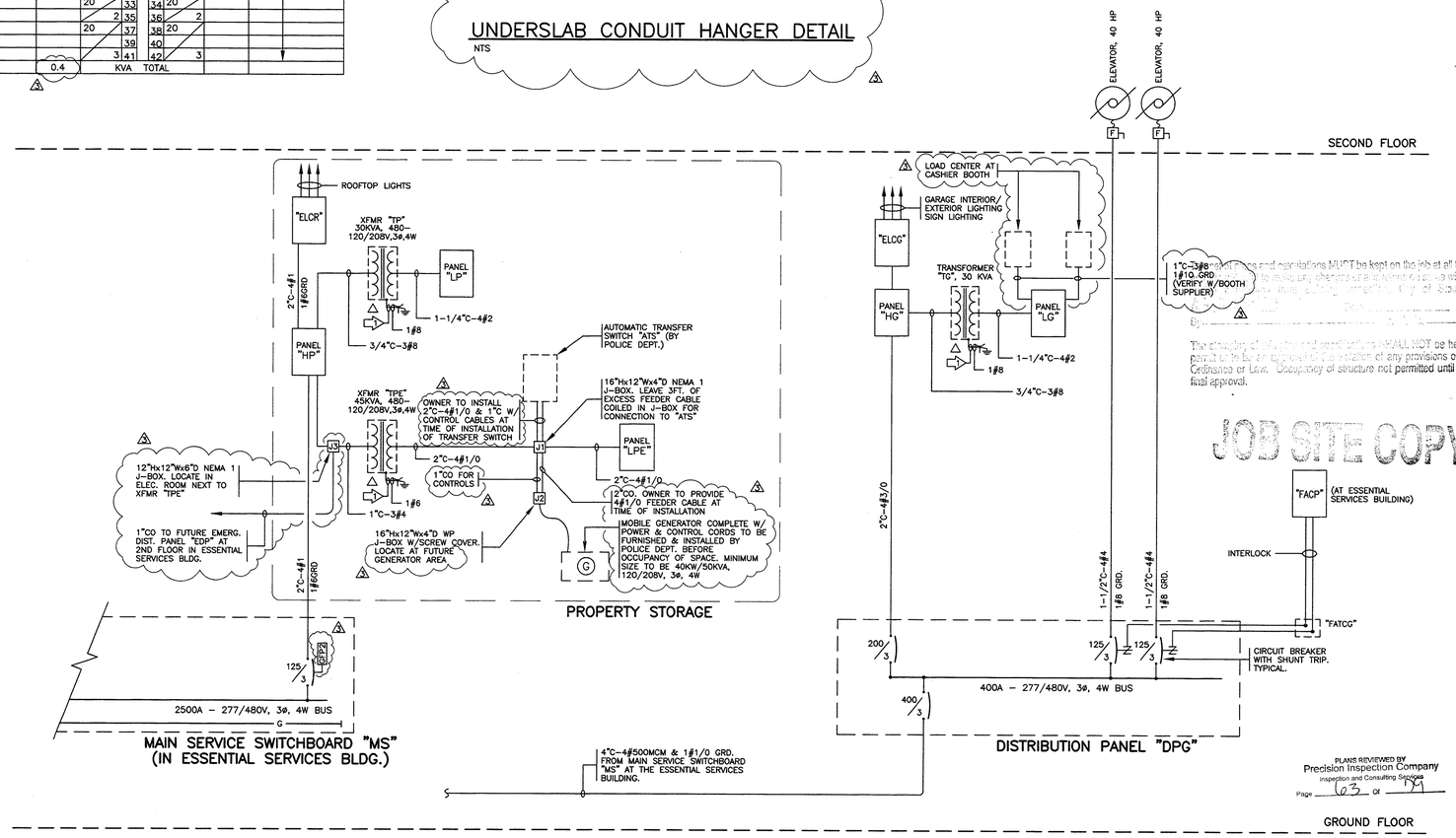

PARTIAL ONE LINE DIAGRAM

NUMBERED NOTES THIS SHEET:

1. PROVIDE GROUNDING CONDUCTOR TO NEAREST METALLIC WATER PIPE PER N.E.C. 250-26(c). PROVIDE GROUND CONDUCTOR AS INDICATED.

PLANS REVIEWED BY Precision Inspection Company Inspection and Consulting Services Page 62 Of 191

ENGLISH HARPER RETA
ARCHITECTS

580 UNIVERSITY AVENUE SUITE 100
SACRAMENTO, CA 95825 (916) 568-1821

THIS DRAWING IS NOT FINAL OR TO BE USED FOR CONSTRUCTION UNTIL IT IS SIGNED BY THE ARCHITECT AND THE OWNER.

ARCHITECT
EDWARD P. ENGLISH C-10399
RICHARD L. HARPER C-13830
RONALD A. RETA C- 9879

OWNER

CONTRACTOR

Turner CONSTRUCTION COMPANY

HCS ENGINEERING, INC.
CONSULTING ELECTRICAL ENGINEERS
4651 QUAIL LAKES DRIVE
STOCKTON, CA 95207 (209)478-8270
PROJ. 99133 DES. CML ENG. BP

Essential Services Facility
(UNDER SEPARATE DOCUMENT PACKAGE)

KEY PLAN

Approved plans and permits MUST be kept on the job at all times. Approval of plans does not permit the violation of any provisions of any Ordinance or Law. Occupancy of structure not permitted until after final approval.

JOB SITE COPY

DATE	NO.	DESCRIPTION
1-13-2000	4	OVERALL PERMIT SET
11-15-99	3	OVERALL PLANCHECK SET
10-18-99	2	PROGRESS SET

REVISIONS
DRAWN BY CML
CHECKED BY

Parking Garage
City of Stockton, California
G.M.P. BID SET

DRAWING
ELECTRICAL PANEL SCHEDULES & DETAILS

PROJECT NO. 98113
DRAWING NO. E1.01G
CADFILE E1_01G
DATE 7 SEPTEMBER 1999

1-11-00 COLLINS\ESF\ELEC\00\GARAGE\E1_010

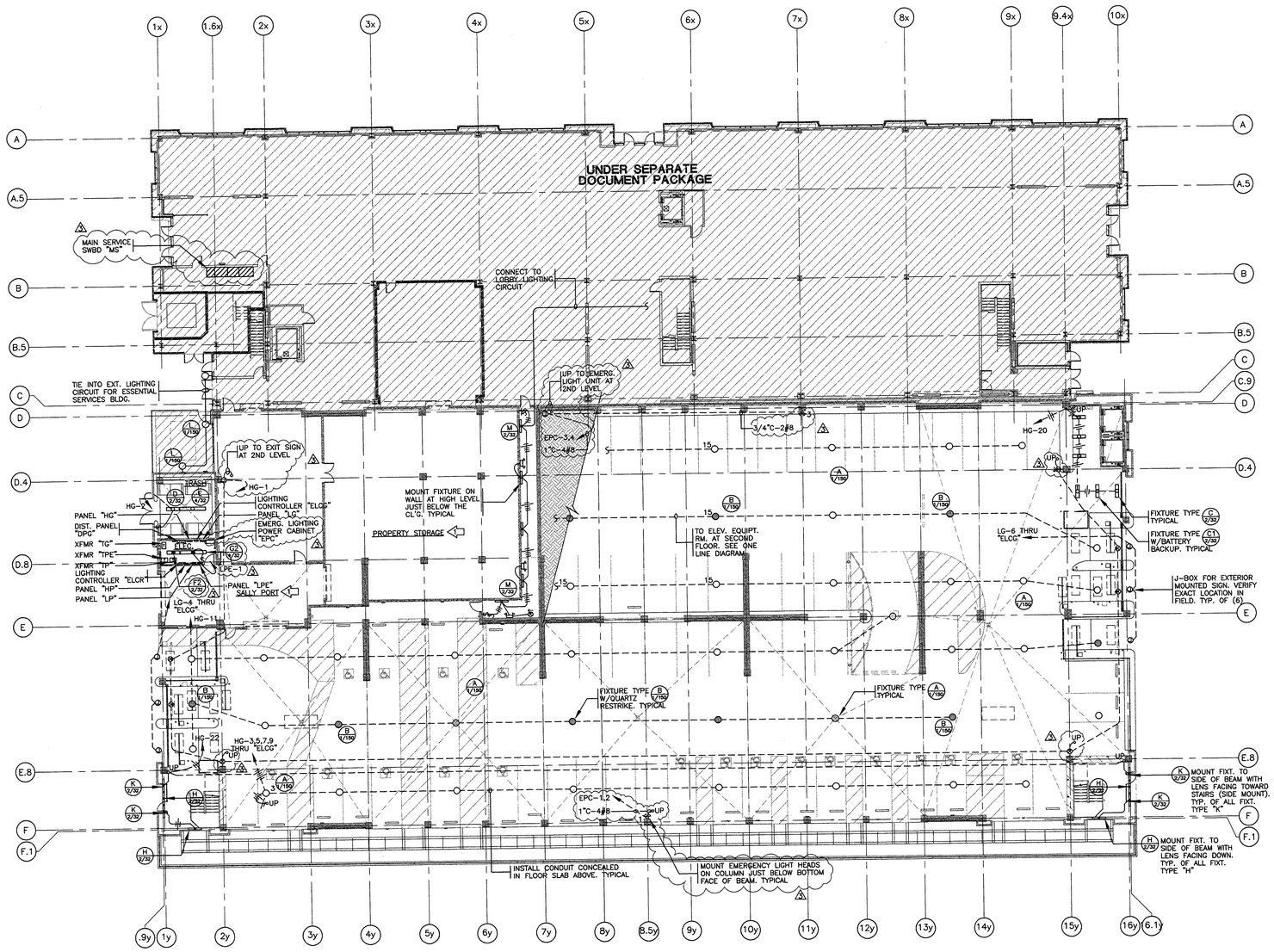

GROUND LEVEL PARKING LIGHTING PLAN
SCALE: 1/16"=1'-0"

ELECTRICAL NOTES

NUMBERED NOTES THIS SHEET:

1. THIS AREA TO BE IMPROVED UNDER TENANT IMPROVEMENT PLANS.

This set of plans and specifications MUST be kept on the job at all times and it is unlawful to make any changes or alterations on same without written APPROVED By

The granting of this plan check approval SHALL NOT be held to permit or to be an approval of the violation of any provisions of any Ordinance or Law. Occupancy of structure not permitted until after final approval.

JOB SITE COPY

PLANS REVIEWED BY
Precision Inspection Company
Inspection and Consulting Services
Page 104 OF 176

ENGLISH HARPER RETA
ARCHITECTS

580 UNIVERSITY AVENUE SUITE 100
SACRAMENTO, CA 95825 (916) 568-1821

THIS DRAWING IS NOT FINAL OR TO BE USED FOR CONSTRUCTION UNTIL IT IS SIGNED BY THE ARCHITECT AND THE OWNER.

ARCHITECT
EDWARD P. ENGLISH C-10399
RICHARD L. HARPER C-13830
RONALD A. RETA C- 9879

OWNER

CONTRACTOR

REGISTERED ARCHITECT EDWARD P. ENGLISH No. C-10399 REN. 3-31- STATE OF CALIFORNIA

Turner CONSTRUCTION COMPANY

HCS ENGINEERING, INC.
CONSULTING ELECTRICAL ENGINEERS
4651 QUAIL LAKES DRIVE
STOCKTON, CA 95207 (209)478-8270
PROJ. 99133 DES. CML ENG. BP

REGISTERED PROFESSIONAL ENGINEER BRIAN PUTNAM No. E-13 RENEWAL 9-30-03 STATE OF CALIFORNIA

Essential Services Facility
(UNDER SEPARATE DOCUMENT PACKAGE)

KEY PLAN

DATE	NO.	DESCRIPTION
1-13-2000	3	OVERALL PERMIT SET
11-15-99	2	OVERALL PLANCHECK SET
10-18-99	1	PROGRESS SET

REVISIONS

DRAWN BY
CML

CHECKED BY

Parking Garage
City of Stockton, California
G.M.P. BID SET

DRAWING
GROUND LEVEL PARKING LIGHTING PLAN

PROJECT NO. 98113
DRAWING NO. E2.01G
CADFILE E2_01G
DATE 7 SEPTEMBER 1999

1-11-00 COLLINS\ESF\ELEC\00\GARAGE\E2_01G

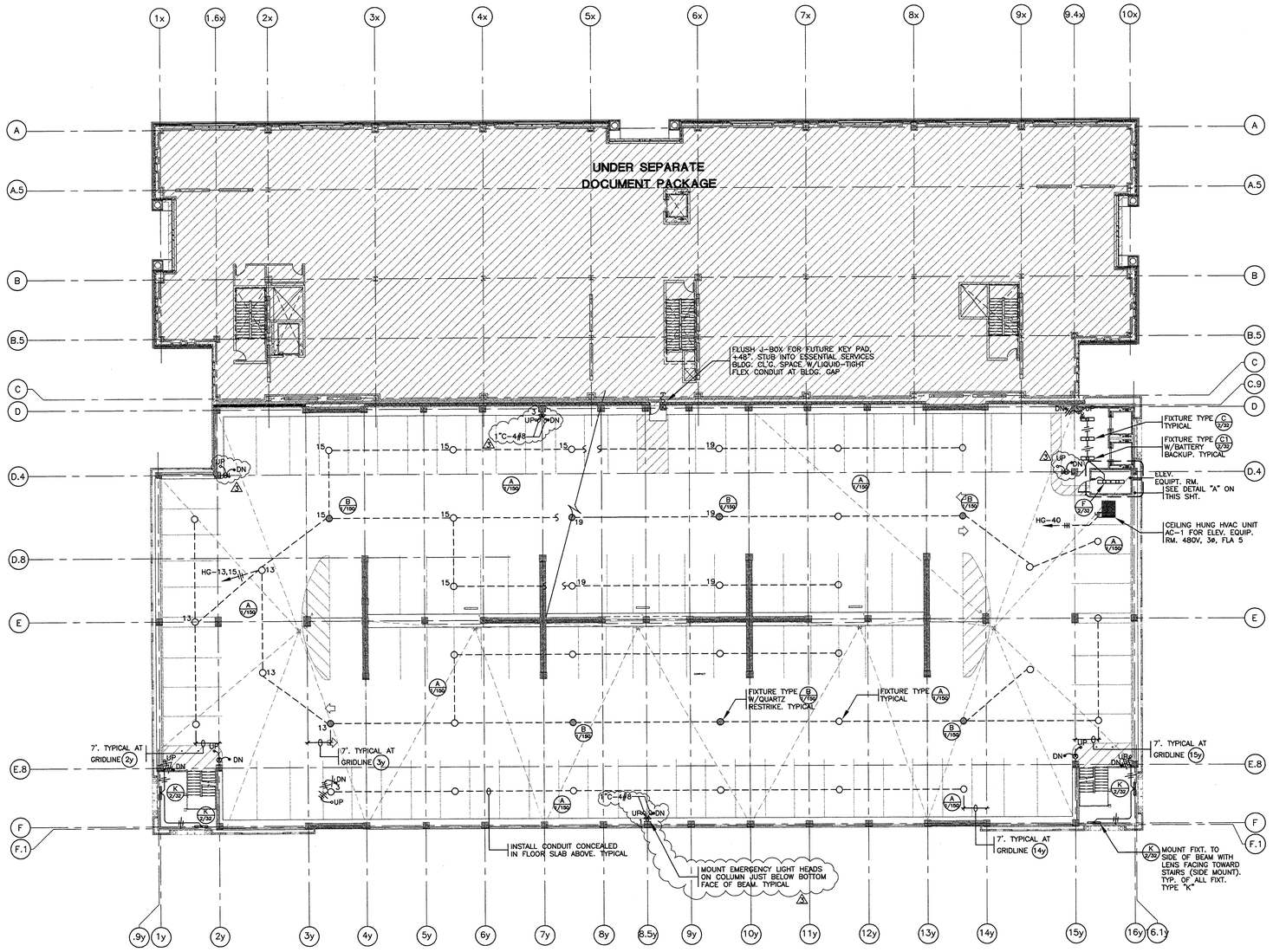

SECOND LEVEL PARKING ELECTRICAL PLAN
SCALE: 1/16"=1'-0"

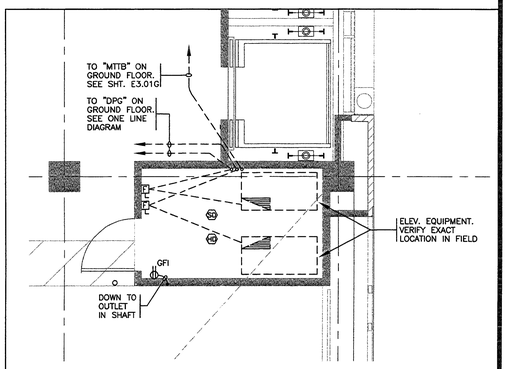

PARTIAL ELECTRICAL PLAN: ELEVATOR EQUIPMENT ROOM
SCALE: 1/4"=1'-0"

SEE SHT. E2.01G FOR ELEVATOR INSTALLATION NOTES.

A

This set of plans and specifications MUST be kept on the job at all times and it is unlawful to make any changes or alterations on the same, or to make any other use of the plans and specifications without the written consent of the Architect.

By _____

The stamping of this plan and specifications SHALL NOT be held to permit or to be an approval of the violation of any provisions of any Ordinance or Law. Occupancy of structure not permitted until after final approval.

JOB SITE COPY

PLANS REVIEWED BY
Precision Inspection Company
Inspection and Consulting Services
Page 65 of 79

ENGLISH HARPER RETA
ARCHITECTS

580 UNIVERSITY AVENUE SUITE 100
SACRAMENTO, CA 95825 (916) 568-1821

THIS DRAWING IS NOT FINAL OR TO BE USED FOR CONSTRUCTION UNTIL IT IS SIGNED BY THE ARCHITECT AND THE OWNER.

ARCHITECT
EDWARD P. ENGLISH C-10399
RICHARD L. HARPER C-13830
RONALD A. RETA C- 9879

OWNER

CONTRACTOR

Turner CONSTRUCTION COMPANY

HCS ENGINEERING, INC.
CONSULTING ELECTRICAL ENGINEERS
4651 QUAIL LAKES DRIVE
STOCKTON, CA 95207 (209)478-8270

PROJ. 99133 DES. CML ENG. BP

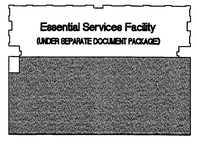

KEY PLAN

DATE	NO.	DESCRIPTION
1-13-2000	3	OVERALL PERMIT SET
11-15-99	2	OVERALL PLANCHECK SET
10-18-99	1	PROGRESS SET

REVISIONS

DRAWN BY
CML

CHECKED BY

Parking Garage
City of Stockton, California
G.M.P. BID SET

DRAWING
SECOND LEVEL PARKING ELECTRICAL PLAN

PROJECT NO. 98113
DRAWING NO. E2.02G
CADFILE E2_02G
DATE 7 SEPTEMBER 1999

1-11-00 COLLINS\ESF\ELEC\DD\GARAGE\E2_02G

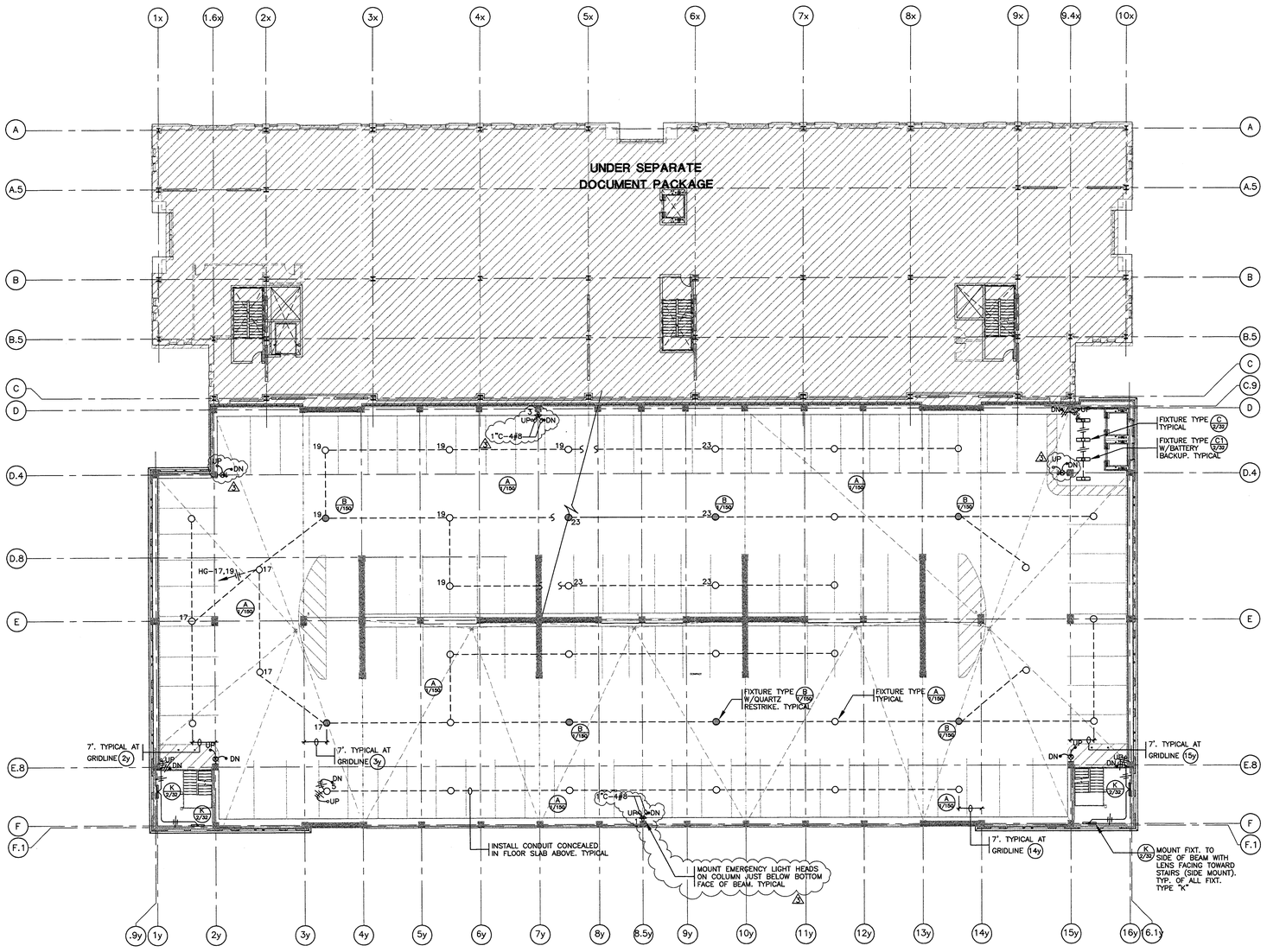

THIRD LEVEL PARKING ELECTRICAL PLAN
SCALE: 1/16"=1'-0"

ENGLISH HARPER RETA
ARCHITECTS

580 UNIVERSITY AVENUE SUITE 100
SACRAMENTO, CA 95825 (916) 568-1821

THIS DRAWING IS NOT FINAL OR TO BE USED FOR CONSTRUCTION UNTIL IT IS SIGNED BY THE ARCHITECT AND THE OWNER.

ARCHITECT
EDWARD P. ENGLISH C-10399
RICHARD L. HARPER C-13830
RONALD A. RETA C- 9879

OWNER

CONTRACTOR

Turner CONSTRUCTION COMPANY

HCS ENGINEERING, INC.
CONSULTING ELECTRICAL ENGINEERS
4651 QUAIL LAKES DRIVE
STOCKTON, CA 95207 (209)478-8270
PROJ. 99133 DES. CML ENG. BP

Essential Services Facility
(UNDER SEPARATE DOCUMENT PACKAGE)

KEY PLAN

DATE	NO.	DESCRIPTION
1-13-2000	3	OVERALL PERMIT SET
11-15-99	2	OVERALL PLANCHECK SET
10-18-99	1	PROGRESS SET

REVISIONS

DRAWN BY
CML

CHECKED BY

Parking Garage
City of Stockton, California
G.M.P. BID SET

DRAWING
THIRD LEVEL PARKING ELECTRICAL PLAN

PROJECT NO. 98113
DRAWING NO. E2.03G
CADFILE E2_03G
DATE 7 SEPTEMBER 1999

This set of plans and specifications MUST be kept on the job at all times and is to be made available to the Inspector of the Division of the State Architect. [illegible]

By _____ Date _____

The stamping of this plan and specifications SHALL NOT be held to permit or to be an approval of the violation of any provisions of any Ordinance or Law. Occupancy of structure not permitted until after final approval.

JOB SITE COPY

PLANS REVIEWED BY
Precision Inspection Company
Inspection and Consulting Services
Page 66 of 79

1-11-00 COLLINS\ESF\ELEC\DD\GARAGE\E2_03G

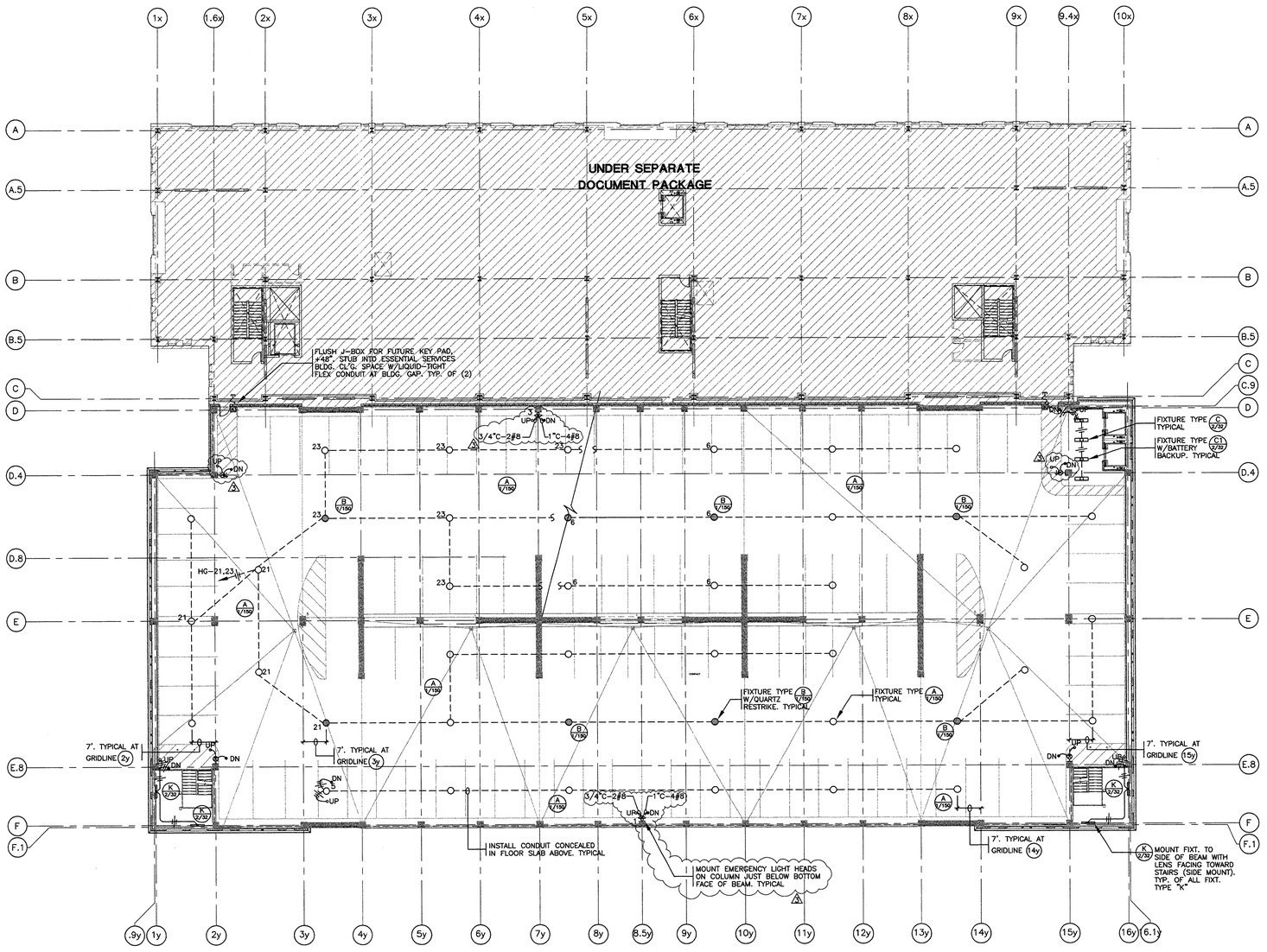

FOURTH LEVEL PARKING ELECTRICAL PLAN

SCALE: 1/16"=1'-0"

This set of plans and specifications MUST be kept on the job at all times and is subject to the [illegible]

The stamping of this plan and specifications SHALL NOT be held to permit or to be an approval of the violation of any provisions of any Ordinance or Law. Occupancy of structure not permitted until after final approval.

JOB SITE COPY

PLANS REVIEWED BY
Precision Inspection Company
Inspection and Consulting Services
Page 67 of 79

ENGLISH HARPER RETA
ARCHITECTS

580 UNIVERSITY AVENUE
SACRAMENTO, CA 95825
SUITE 100
(916) 568-1821

THIS DRAWING IS NOT FINAL OR TO BE USED FOR CONSTRUCTION UNTIL IT IS SIGNED BY THE ARCHITECT AND THE OWNER.

ARCHITECT
EDWARD P. ENGLISH C-10399
RICHARD L. HARPER C-13830
RONALD A. RETA C- 9879

OWNER

CONTRACTOR

LICENSED ARCHITECT RICHARD L. HARPER No. 3-13830 REN. 3-31 STATE OF CALIFORNIA

Turner
CONSTRUCTION COMPANY

HCS ENGINEERING, INC.
CONSULTING ELECTRICAL ENGINEERS
4651 QUAIL LAKES DRIVE
STOCKTON, CA 95207 (209)478-8270
PROJ. 99133 DES. CML ENG. BP

REGISTERED PROFESSIONAL ENGINEER No. 012571 Exp. 9-30-03 ELECTRICAL STATE OF CALIFORNIA

Essential Services Facility
(UNDER SEPARATE DOCUMENT PACKAGE)

KEY PLAN

DATE	NO.	DESCRIPTION
1-13-2000	3	OVERALL PERMIT SET
11-15-99	2	OVERALL PLANCHECK SET
10-18-99	1	PROGRESS SET

REVISIONS

DRAWN BY
CML

CHECKED BY

Parking Garage
City of Stockton, California
G.M.P. BID SET

DRAWING
FOURTH LEVEL PARKING ELECTRICAL PLAN

PROJECT NO. 98113
DRAWING NO. E2.04G
CADFILE E2_04G
DATE 7 SEPTEMBER 1999

1-11-00 COLLINS\ESF\ELEC\DD\GARAGE\E2_04G

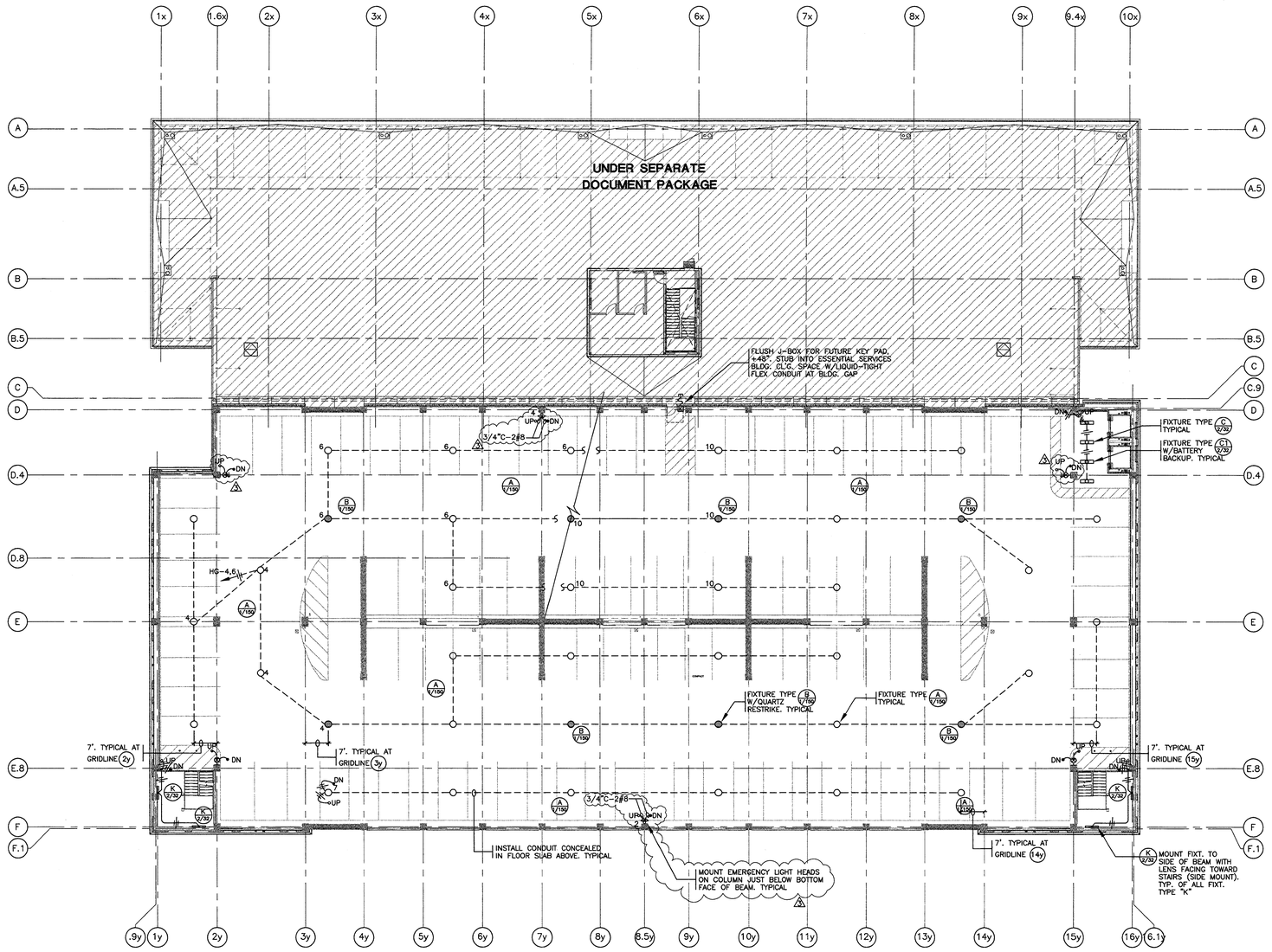

FIFTH LEVEL PARKING ELECTRICAL PLAN

SCALE: 1/16"=1'-0"

This set of plans and calculations MUST be kept on the job at all times and it is unlawful to make any changes or alterations on same without written permission from the Architect. [illegible]

By _____

The stamping of this plan and specifications SHALL NOT be held to permit or to be an approval of the violation of any provisions of any Ordinance or Law. Occupancy of structure not permitted until after final approval.

JOB SITE COPY

PLANS REVIEWED BY
Precision Inspection Company
Inspection and Consulting Services
Page 68 of 79

ENGLISH HARPER RETA
ARCHITECTS

580 UNIVERSITY AVENUE
SACRAMENTO, CA 95825
SUITE 100
(916) 568-1821

THIS DRAWING IS NOT FINAL OR TO BE USED FOR CONSTRUCTION UNTIL IT IS SIGNED BY THE ARCHITECT AND THE OWNER.

ARCHITECT
EDWARD P. ENGLISH C-10399
RICHARD L. HARPER C-13830
RONALD A. RETA C- 9879

OWNER

CONTRACTOR

Turner
CONSTRUCTION COMPANY

HCS ENGINEERING, INC.
CONSULTING ELECTRICAL ENGINEERS
4651 QUAIL LAKES DRIVE
STOCKTON, CA 95207 (209)478-8270
PROJ. 99133 DES. CML ENG. BP

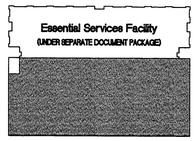

KEY PLAN

DATE	NO.	DESCRIPTION
1-13-2000	3	OVERALL PERMIT SET
11-15-99	2	OVERALL PLANCHECK SET
10-18-99	1	PROGRESS SET

REVISIONS

DRAWN BY
CML

CHECKED BY

Parking Garage
City of Stockton, California
G.M.P. BID SET

DRAWING
FIFTH LEVEL PARKING ELECTRICAL PLAN

PROJECT NO. 98113
DRAWING NO. E2.05G
CADFILE E2_05G
DATE 7 SEPTEMBER 1999

1-11-00 COLLINS\ESF\ELEC\DD\GARAGE\E2_05G

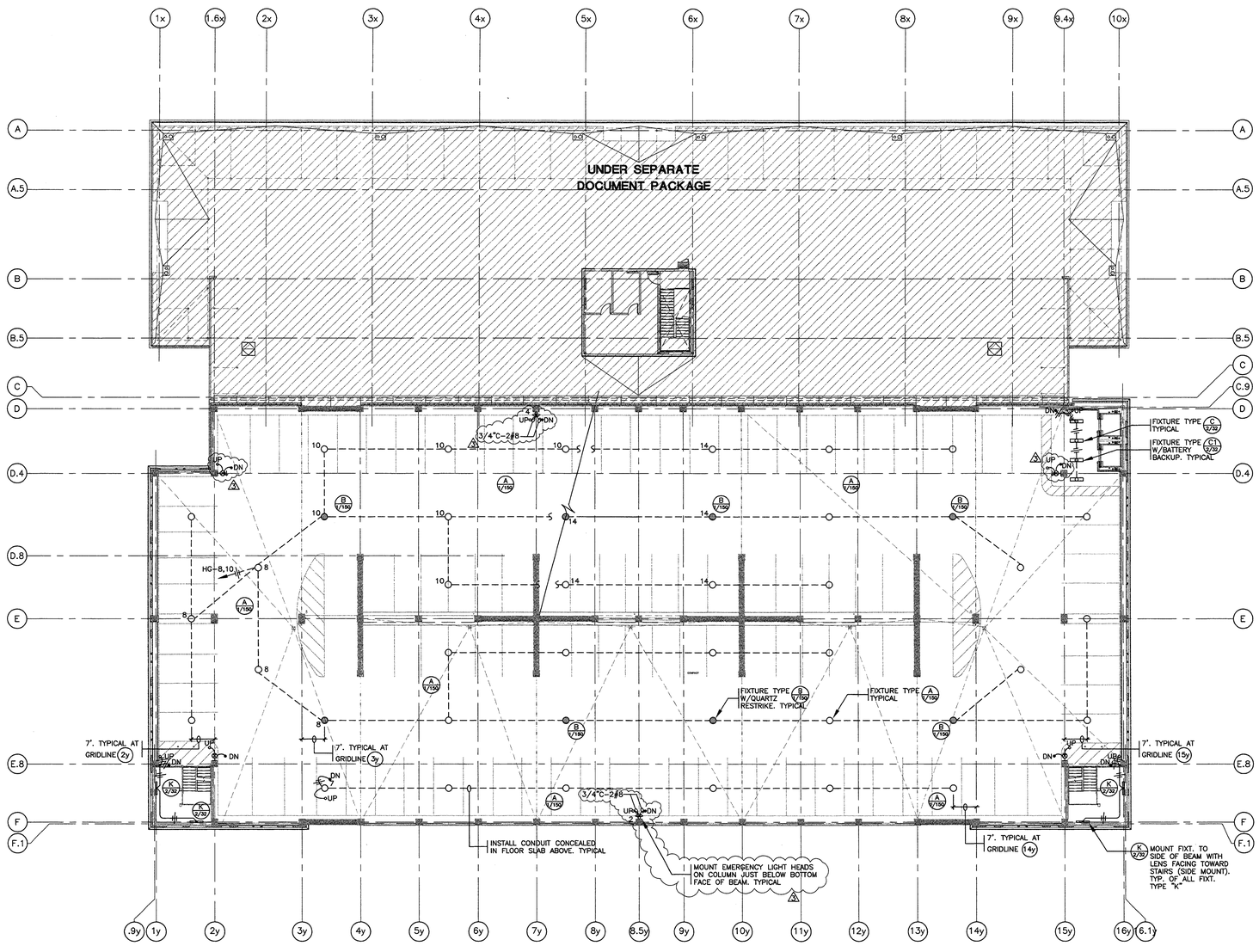

SIXTH LEVEL PARKING ELECTRICAL PLAN
SCALE: 1/16"-1'-0"

This set of plans and specifications MUST be kept on the job at all times and it is unlawful to [illegible] without written [illegible] of the Architect. Visual contact has been made with the site and surrounding properties to determine existing conditions.

By _____

The issuance of this permit does not prevent the building official from requiring the correction of errors in the plans and construction or violations of any Ordinance or Law. Occupancy or use shall not be permitted until after final approval.

JOB SITE COPY

PLANS REVIEWED BY
Precision Inspection Company
Inspection and Consulting Services
Page 69 Of 79

ENGLISH HARPER RETA
ARCHITECTS

580 UNIVERSITY AVENUE SUITE 100
SACRAMENTO, CA 95825 (916) 568-1821

THIS DRAWING IS NOT FINAL OR TO BE USED FOR CONSTRUCTION UNTIL IT IS SIGNED BY THE ARCHITECT AND THE OWNER.

ARCHITECT
EDWARD P. ENGLISH C-10399
RICHARD L. HARPER C-13830
RONALD A. RETA C- 9879

OWNER

CONTRACTOR

LICENSED ARCHITECT RICHARD L. HARPER No. C-13830 REN. 3-31- STATE OF CALIFORNIA

Turner CONSTRUCTION COMPANY

HCS ENGINEERING, INC.
CONSULTING ELECTRICAL ENGINEERS
4651 QUAIL LAKES DRIVE
STOCKTON, CA 95207 (209)478-8270
PROJ. 99133 DES. CML ENG. BP

REGISTERED PROFESSIONAL ENGINEER BRIAN P. KELLEY No. E12571 ELECTRICAL STATE OF CALIFORNIA 9-30-03

Essential Services Facility
(UNDER SEPARATE DOCUMENT PACKAGE)

KEY PLAN

DATE	NO.	DESCRIPTION
1-13-2000	3	OVERALL PERMIT SET
11-15-99	2	OVERALL PLANCHECK SET
10-18-99	1	PROGRESS SET

REVISIONS

DRAWN BY
CML

CHECKED BY

Parking Garage
City of Stockton, California
G.M.P. BID SET

DRAWING
SIXTH LEVEL PARKING ELECTRICAL PLAN

PROJECT NO. 98113
DRAWING NO. E2.06G
CADFILE E2_06G
DATE 7 SEPTEMBER 1999

1-11-00 COLLINS\EST\ELEC\00\GARAGE\E2_06G

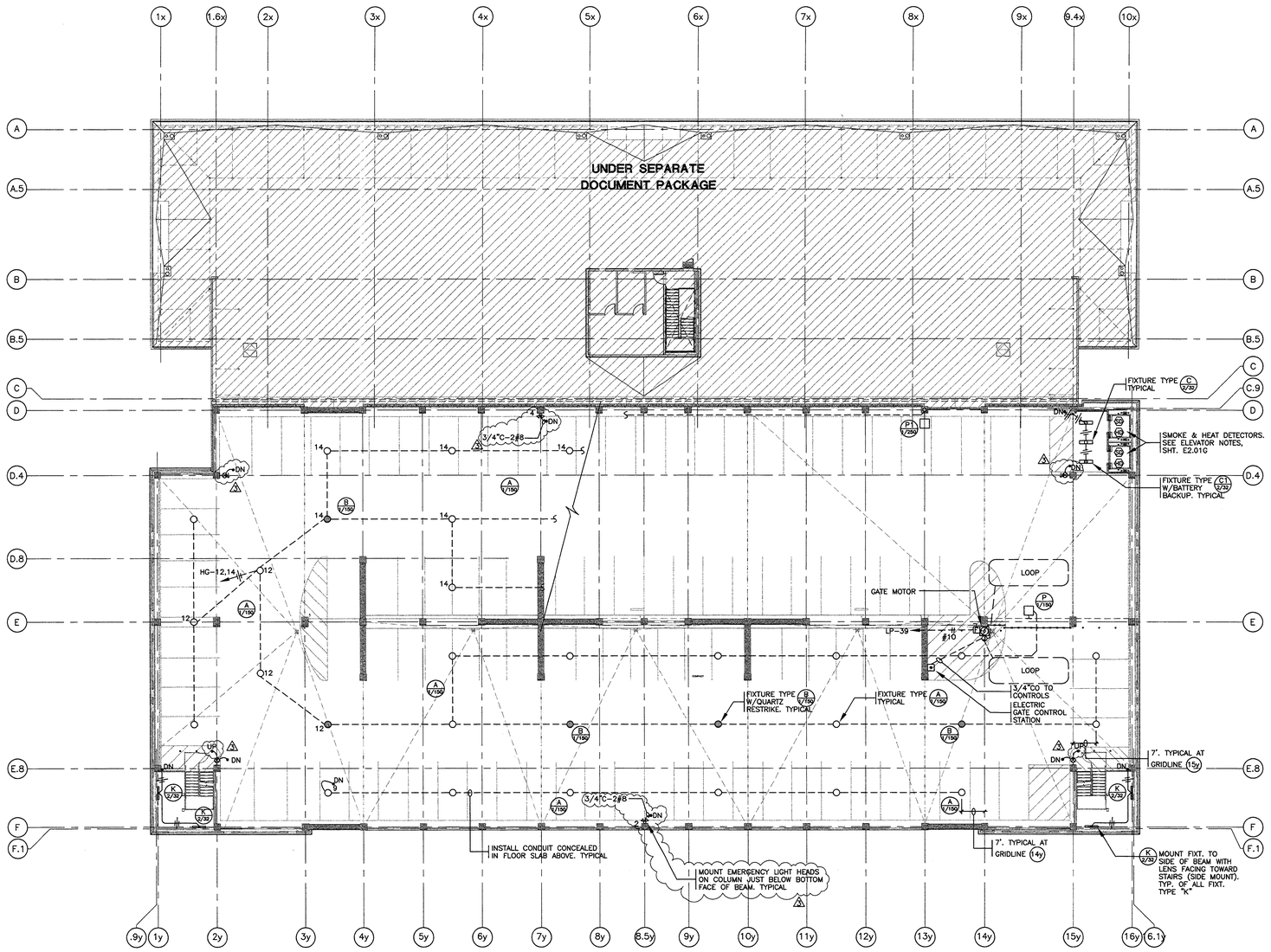

SEVENTH LEVEL PARKING ELECTRICAL PLAN

SCALE: 1/16"=1'-0"

This set of plans and calculations MUST be kept on the job at all times and it is unlawful to make any changes or alterations on same without written permission from Building Inspection, City of Stockton.

By _____

The stamping of this plan and specifications SHALL NOT be held to permit or to be an approval of the violation of any provisions of any Ordinance or Law. Occupancy of structure not permitted until after final approval.

JOB SITE COPY

PLANS REVIEWED BY
Precision Inspection Company
Inspection and Consulting Services
Page 70 Of 79

ENGLISH HARPER RETA
ARCHITECTS

580 UNIVERSITY AVENUE
SACRAMENTO, CA 95825
SUITE 100
(916) 568-1821

THIS DRAWING IS NOT FINAL OR TO BE USED FOR CONSTRUCTION UNTIL IT IS SIGNED BY THE ARCHITECT AND THE OWNER.

ARCHITECT
EDWARD P. ENGLISH C-10399
RICHARD L. HARPER C-13830
RONALD A. RETA C- 9879

OWNER

CONTRACTOR

Turner
CONSTRUCTION COMPANY

HCS ENGINEERING, INC.
CONSULTING ELECTRICAL ENGINEERS
4651 QUAIL LAKES DRIVE
STOCKTON, CA 95207 (209)478-8270
PROJ. 99133 DES. CML ENG. BP

Essential Services Facility
(UNDER SEPARATE DOCUMENT PACKAGE)

KEY PLAN

DATE	NO.	DESCRIPTION
1-13-2000	3	OVERALL PERMIT SET
11-15-99	2	OVERALL PLANCHECK SET
10-18-99	1	PROGRESS SET

REVISIONS

DRAWN BY
CML

CHECKED BY

Parking Garage
City of Stockton, California
G.M.P. BID SET

DRAWING
SEVENTH LEVEL PARKING ELECTRICAL PLAN

PROJECT NO. 98113
DRAWING NO. E2.07G
CADFILE E2_07G
DATE 7 SEPTEMBER 1999

1-11-00 COLLINS\ESF\ELEC\DD\GARAGE\E2_07G

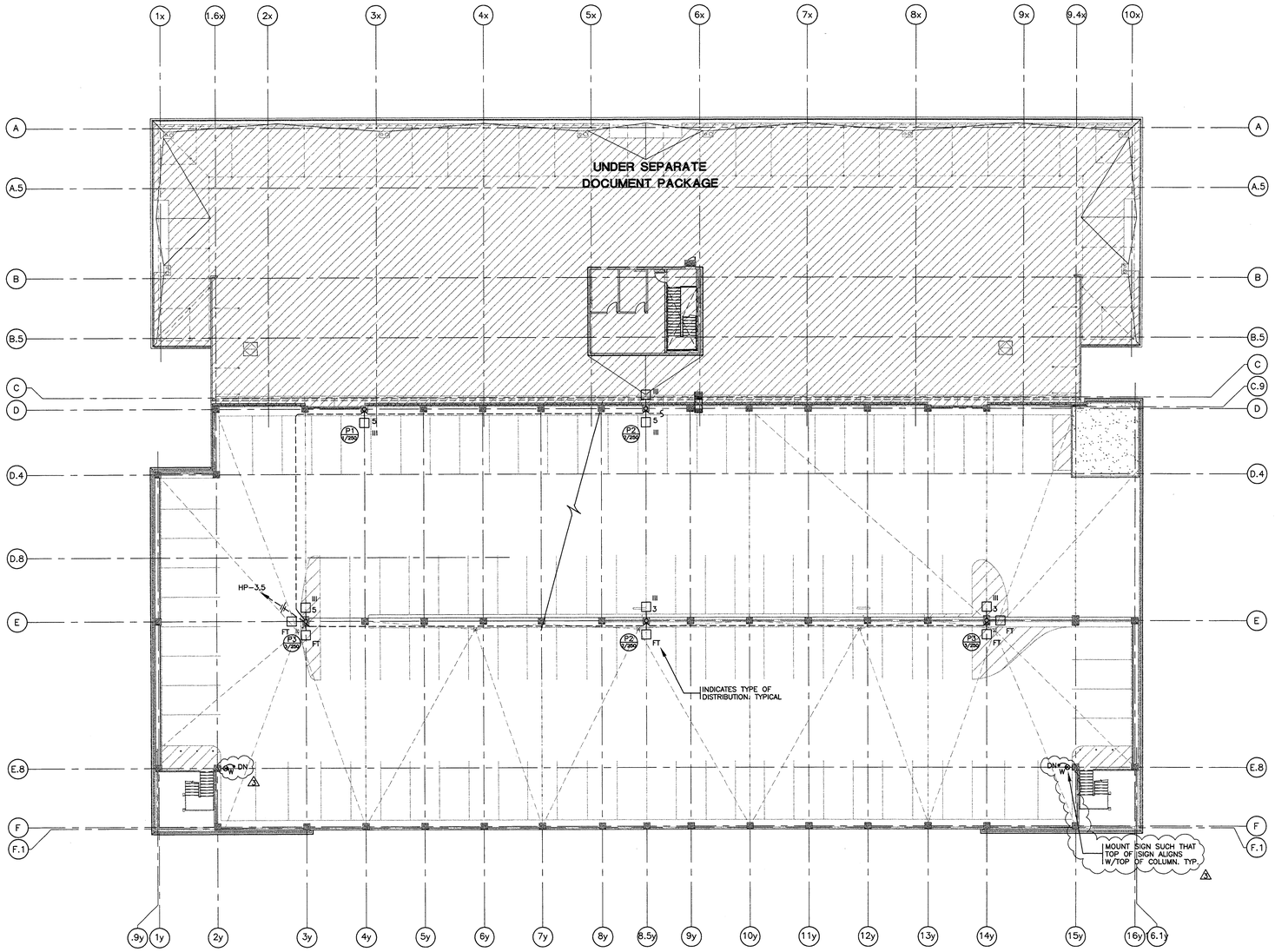

EIGHTH LEVEL PARKING ELECTRICAL PLAN
SCALE: 1/16"=1'-0"

1-11-00 COLLINS\ES\FILEC\00\GARAGE\E2_08G

This set of plans and specifications MUST be kept on the job at all times and it is a violation of law to ... without permission of the Architect. ... shall not be held to permit or to be an approval of the violation of any provisions of any Codes or Law. Occupancy of structure not permitted until after final approval.

JOB SITE COPY

PLANS REVIEWED BY
Precision Inspection Company
Inspection and Consulting Services
Page 21 Of 179

ENGLISH HARPER RETA
ARCHITECTS

580 UNIVERSITY AVENUE SUITE 100
SACRAMENTO, CA 95825 (916) 568-1821

THIS DRAWING IS NOT FINAL OR TO BE USED FOR CONSTRUCTION UNTIL IT IS SIGNED BY THE ARCHITECT AND THE OWNER.

ARCHITECT
EDWARD P. ENGLISH C-10399
RICHARD L. HARPER C-13830
RONALD A. RETA C- 9879

OWNER

CONTRACTOR

LICENSED ARCHITECT
RONALD A. RETA
No. C-9879
REN. 3-31-
STATE OF CALIFORNIA

Turner
CONSTRUCTION
COMPANY

HCS ENGINEERING, INC.
CONSULTING ELECTRICAL ENGINEERS
4651 QUAIL LAKES DRIVE
STOCKTON, CA 95207 (209)478-8270
PROJ. 99133 DES. CML ENG. BP

REGISTERED PROFESSIONAL ENGINEER
CHRISTOPHER M. LEE
No. 017571
Exp. 9-30-03
ELECTRICAL
STATE OF CALIFORNIA

Essential Services Facility
UNDER SEPARATE DOCUMENT PACKAGE

KEY PLAN

DATE	NO.	DESCRIPTION
1-13-2000	3	OVERALL PERMIT SET
11-15-99	2	OVERALL PLANCHECK SET
10-18-99	1	PROGRESS SET

REVISIONS

DRAWN BY
CML

CHECKED BY

Parking Garage
City of Stockton, California
G.M.P. BID SET

DRAWING
EIGHTH LEVEL PARKING ELECTRICAL PLAN

PROJECT NO. 98113
DRAWING NO. E2.08G
CADFILE E2_08G
DATE 7 SEPTEMBER 1999

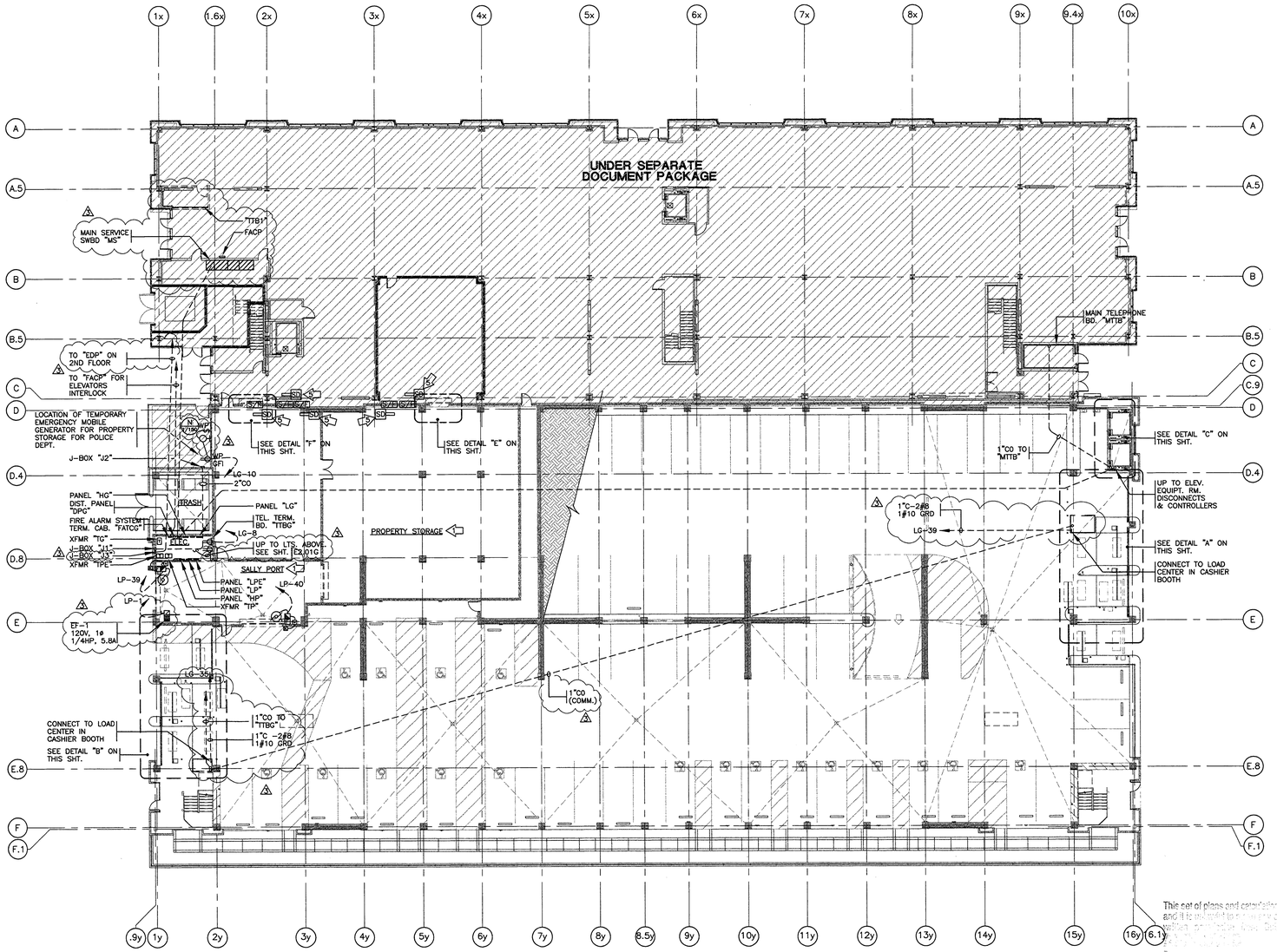

GROUND LEVEL PARKING POWER & SIGNAL SYSTEMS PLAN
SCALE: 1/16"-1'-0"

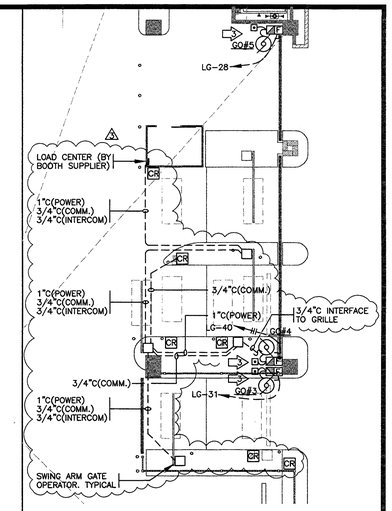

PARTIAL ELECTRICAL PLAN: EAST ENTRANCE
SCALE: 1/8"-1'-0"

A

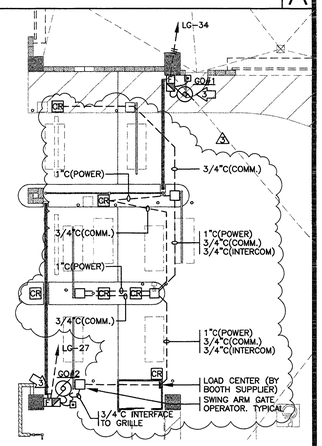

PARTIAL ELECTRICAL PLAN: WEST ENTRANCE
SCALE: 1/8"-1'-0"

B

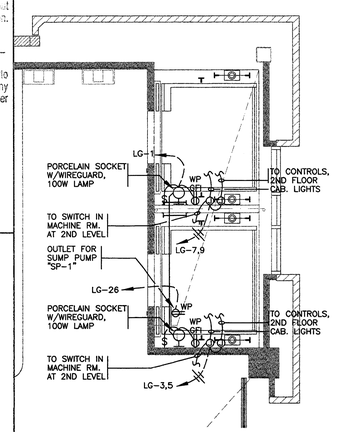

PARTIAL ELECTRICAL PLAN: ELEVATOR AREA
SCALE: 1/4"-1'-0"

C

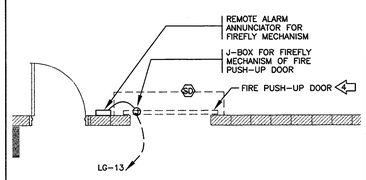

PARTIAL ELECTRICAL PLAN: FIRE SHUTTER
SCALE: 1/4"-1'-0"

F

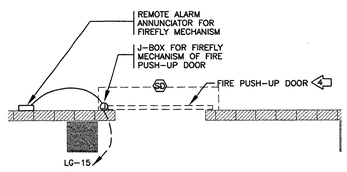

PARTIAL ELECTRICAL PLAN: FIRE SHUTTER
SCALE: 1/4"-1'-0"

E

NUMBERED NOTES THIS SHEET:

1. TO BE IMPROVED AT TIME OF TENANT IMPROVEMENTS.
2. NOT USED
3. ELECTRIC GRILLE OPERATOR. VERIFY EXACT LOCATION IN FIELD. PROVIDE DISCONNECT AND ALL HOOKUPS FOR POWER AND CONTROL STATIONS.
4. PUSH-UP FIRE DOOR WITH "FIREFLY" MECHANISM AND REMOTE ALARM ANNUNCIATOR TO BE PROVIDED UNDER ANOTHER SECTION. FIREFLY MECHANISM SHALL BE PROVIDED WITH AN INTEGRAL DELAY MECHANISM. ELECTRICAL CONTRACTOR SHALL INTERCONNECT THE SMOKE DETECTION SYSTEM, THE REMOTE ALARM ANNUNCIATOR AND THE FIREFLY MECHANISM AS REQUIRED BY MANUFACTURER'S INSTRUCTIONS. PROVIDE 120V POWER AS NEEDED TO THE SYSTEM. THE FIREFLY SHALL HOLD THE FIRE DOOR IN THE SET POSITION UNTIL THE SMOKE DETECTION SYSTEM IS ACTIVATED. UPON ACTIVATION, THE FIREFLY SHALL MECHANICALLY RELEASE THE FIRE DOOR AFTER A DELAY OF NOT MORE THAN 10 SECONDS. IF THE FIRE ALARM ACTIVATION IS CANCELED BEFORE THE 10 SECOND DELAY, THE FIREFLY SHALL AUTOMATICALLY RESET ITSELF. POWER OUTAGES OF LESS THAN 10 SECONDS SHALL HAVE THE SAME EFFECT AS A CANCELED ALARM ACTIVATION. IF THE ALARM ACTIVATION IS LONGER THAN THE 10 SECOND DELAY, THE FIRE DOOR SHALL BE CLOSED MECHANICALLY. UPON ACTIVATION OF THE ALARM SYSTEM, THE REMOTE ANNUNCIATOR SHALL WARN OCCUPANTS THAT THE FIREFLY HAS BEEN ACTIVATED AND FIRE DOOR WILL DROP IN 10 SECONDS. POWER OUTAGES OF 10 SECONDS OR LESS SHALL NOT EFFECT THE OPERATION OF THE FIREFLY AND THE FIRE DOOR SHALL NOT BE RELEASED.
5. CIRCUIT DUCT SMOKE DETECTOR TO PANEL "LG", CIRCUIT #17. CIRCUITING NOT SHOWN. INTERLOCK WITH FIRE ALARM SYSTEM FOR THE ESSENTIAL SERVICES BUILDING.

G

NOTES: ELECTRICAL INSTALLATION FOR ELEVATORS

1. ALL ELECTRICAL INSTALLATION FOR THE ELEVATOR INSTALLATION SHALL COMPLY WITH ARTICLE 620 OF N.E.C.
2. ALL CONDUCTORS USED FOR WIRING WITHIN THE ELEVATOR EQUIPMENT ROOM SHALL HAVE FLAME RETARDANT INSULATION PER ARTICLE 620-11(c) AND (d).
3. VERIFY ALL STUB LOCATIONS WITH ELEVATOR SUPPLIER IN FIELD PRIOR TO ROUGH-IN.
4. PROVIDE DISCONNECT FOR ELEVATOR CAB LIGHTING AS SHOWN ON PLANS.
5. PROVIDE SYSTEM HEAT DETECTORS (195°F) AND SMOKE DETECTORS IN ELEVATOR MACHINE ROOM AND TOP OF ELEVATOR SHAFTS. INTERCONNECT SMOKE DETECTORS TO ELEVATOR EQUIPMENT CONTROL SYSTEM SUCH THAT ELEVATOR CAB GOES INTO "RECALL" MODE AND COMES DOWN TO GROUND LEVEL ON ACTIVATION OF ANY SMOKE DETECTOR. INTERCONNECT HEAT DETECTORS INTO THE ELEVATOR EQUIPMENT POWER SUPPLY FEEDER CIRCUIT BREAKER SHUNT TRIP COIL SUCH THAT THE CIRCUIT BREAKER TRIPS AND CUTS OFF POWER TO THE ELEVATOR MACHINE ROOM WHEN ANY HEAT DETECTOR IS ACTIVATED. THE DETECTORS SHALL BE MANUALLY RESETTABLE TYPE. CONNECT DETECTORS INTO THE FIRE ALARM SYSTEM CONTROL PANEL. DETECTORS SHALL BE COMPATIBLE WITH THIS PANEL AND SHALL HAVE SEPARATE INDEPENDENT ZONES EACH FOR HEAT AND SMOKE DETECTORS. COORDINATE WITH GENERAL CONTRACTOR TO INCLUDE ALL NECESSARY WORK TO ACHIEVE THIS INTENDED RESULT. ALL WORK SHALL BE IN COMPLIANCE WITH TITLE 8 OF STATE OF CALIFORNIA.

D

This set of plans and specifications MUST be kept on the job at all times and it is unlawful to make any change or alteration on same, or any part thereof, without permission from the BUILDING DIVISION, City of Stockton.

By _____

This stamp does not relieve applicant from NOT to hold to permit or to be an approval of the violation of any provisions of any Ordinance or Law. Occupancy of structure not permitted until after final approval.

JOB SITE COPY

PLANS REVIEWED BY
Precision Inspection Company
Inspection and Consulting Services
Page ____ Of ____

ENGLISH HARPER RETA
ARCHITECTS

580 UNIVERSITY AVENUE SUITE 100
SACRAMENTO, CA 95825 (916) 568-1821

THIS DRAWING IS NOT FINAL OR TO BE USED FOR CONSTRUCTION UNTIL IT IS SIGNED BY THE ARCHITECT AND THE OWNER.

ARCHITECT
EDWARD P. ENGLISH C-10399
RICHARD L. HARPER C-13830
RONALD A. RETA C- 9879

OWNER

CONTRACTOR

REGISTERED ARCHITECT RICHARD L. HARPER No. C-13830 EXP. MAY 31, STATE OF CALIFORNIA

Turner CONSTRUCTION COMPANY

HCS ENGINEERING, INC.
CONSULTING ELECTRICAL ENGINEERS
4651 QUAIL LAKES DRIVE
STOCKTON, CA 95207 (209)478-8270
PROJ. 99133 DES. CML ENG. BP

REGISTERED PROFESSIONAL ENGINEER Glen Ventura No. 012571 Exp. 9-30-03 ELECTRICAL STATE OF CALIFORNIA

Essential Services Facility (UNDER SEPARATE DOCUMENT PACKAGE)

KEY PLAN

DATE	NO.	DESCRIPTION
1-13-2000	3	OVERALL PERMIT SET
11-15-99	2	OVERALL PLANCHECK SET
10-18-99	1	PROGRESS SET

REVISIONS
DRAWN BY CML
CHECKED BY

Parking Garage
City of Stockton, California
G.M.P. BID SET

DRAWING
GROUND LEVEL PARKING POWER & SIGNAL SYSTEMS PLAN

PROJECT NO. 98113
DRAWING NO. E3.01G
CADFILE E3_01G
DATE 7 SEPTEMBER 1999

1-11-00 COLLINS\ESP\ELECT\DWG\GARAGE\E3_01G

GENERAL NOTES:

1. ELECTRICAL INSTALLATION SHALL COMPLY WITH TITLE 24, CALIFORNIA CODE OF REGULATIONS, INCLUDING THE FOLLOWING:
TITLE 24, CCR, PART 2, 1998 CBC (1997 UBC W/CALIF. AMENDMENTS)
TITLE 24, CCR, PART 3, 1998 CEC (1996 NEC W/CALIF. AMENDMENTS)
TITLE 24, CCR, PART 4, 1998 CMC (1997 UMC W/CALIF. AMENDMENTS)
TITLE 24, CCR, PART 9, 1998 CFC (1997 UFC W/CALIF. AMENDMENTS)
ALL APPLICABLE LOCAL CODES.

3. ELECTRICAL CONTRACTOR SHALL PROCURE AND PAY FOR ALL LICENSES, ETC. REQUIRED TO CARRY ON AND COMPLETE THE WORK.

4. PROVIDE ALL LABOR, MATERIALS, TOOLS, PLANT EQUIPMENT, TRANSPORTATION AND PERFORM ALL OPERATIONS NECESSARY FOR ANY REASONABLE INCIDENTAL TO PROPER EXECUTION AND COMPLETION OF ALL "ELECTRICAL WORK". ALL AS INDICATED, SPECIFIED HEREIN, AND/OR IMPLIED THEREBY TO CARRY OUT THE APPARENT INTENT THEREOF.

5. ALL ELECTRICAL MATERIALS SHALL BE NEW AND LISTED WITH THE UNDERWRITERS' LABORATORIES, INC., SHALL MEET THEIR REQUIREMENTS AND SHALL BEAR THEIR LABEL WHEREVER STANDARDS HAVE BEEN ESTABLISHED AND LABEL SERVICE IS REGULARLY FURNISHED BY THAT AGENCY.

6. ELECTRICAL DRAWINGS ARE ESSENTIALLY DIAGRAMMATIC AND ALTHOUGH THE SIZE AND LOCATIONS OF EQUIPMENT ARE SHOWN TO SCALE WHEREVER POSSIBLE, CONTRACTOR SHALL MAKE USE OF ALL DATA IN ALL CONTRACT DOCUMENTS AND VERIFY THIS INFORMATION AT THE SITE. LAYOUT ELECTRICAL WORK TO AVOID INTERFERENCE WITH OTHER TRADES.

7. CONDUCTORS SHALL BE COPPER CONDUCTORS TYPE THWN UNLESS OTHERWISE NOTED OR REQUIRED BY CODE.

8. ALL LUMINAIRES AND BALLASTS SHALL BE CERTIFIED BY THE MANUFACTURER TO THE CALIFORNIA ENERGY COMMISSION. ALL FLUORESCENT FIXTURES TO BE LAMPED WITH F032, T8, 3500K LAMPS OR APPROVED EQUAL, AND HAVE AN ENERGY SAVING "A" SOUND RATING ELECTRONIC BALLAST OR APPROVED EQUAL UNLESS OTHERWISE SHOWN. ALL H.I.D. LIGHT FIXTURES SHALL HAVE HIGH POWER FACTOR BALLASTS.

9. WORK SHOWN ON THE DRAWINGS TO BE INSTALLED UNDERGROUND SHALL BE INSTALLED AT LEAST 24" BELOW GRADE. BACKFILL IN 6" THICK, PROPERLY MOISTENED LAYERS, SOLIDLY PACKED AND IRON TAMPED TO A DENSITY NOT LESS THAN THAT OF ADJACENT, UNDISTURBED EARTH.

10. ALL EXIT SIGNS TO BE UNSWITCHED.

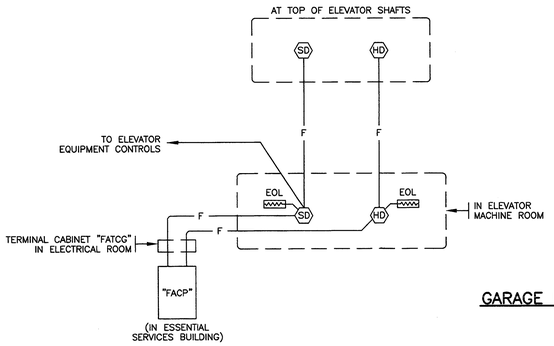

ELEVATOR EQUIPMENT RECALL INTERCONNECT TO FIRE ALARM SYSTEM

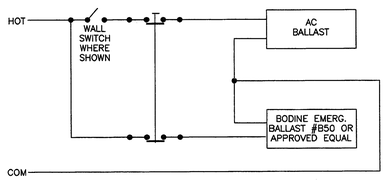

WIRING SCHEMATIC FOR SWITCHED EMERGENCY LIGHT FIXTURE

EMERGENCY BALLAST TO OPERATE (1) LAMP

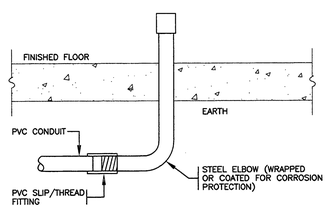

STEEL ELBOW THRU FLOOR

TERMINATING NON-METALLIC PVC CONDUITS

NTS

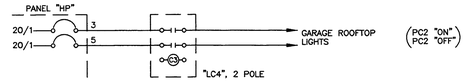

GARAGE ROOFTOP LIGHTING CONTROL SCHEMATIC

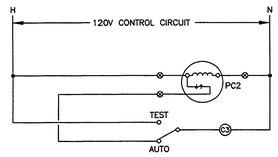

GARAGE ROOFTOP LIGHTING CONTROL WIRING DIAGRAM

NOTES: GARAGE ROOFTOP LIGHTING CONTROL SYSTEM

1. PROVIDE A LIGHTING CONTROL SYSTEM FOR THE ROOFTOP LIGHTS.
2. MOUNT ALL CONTROL COMPONENTS, CONTACTORS, TIME CLOCKS, ETC., IN ONE SURFACE, NEMA 1, ENCLOSURE "ELCG", WITH DOOR AND LATCH AT LOCATION SHOWN ON PLANS. PROVIDE TERMINAL STRIP FOR ALL EXTERNAL CONNECTIONS.
3. PROVIDE LABELS FOR ALL CIRCUIT AND CONTROL COMPONENTS.
4. LC4 – 20A, ELECTRICALLY HELD LIGHTING CONTACTORS. POLES AS SHOWN.
PC2 – PHOTOCELL, ADJUSTABLE. MOUNT ON ROOF FACING NORTH.
ADJUST PHOTOCELLS AS INSTRUCTED IN FIELD TO ALLOW RESPECTIVE LIGHTS CONTROLLED TO SWITCH ON AT THE RIGHT LEVEL OF DARKNESS.

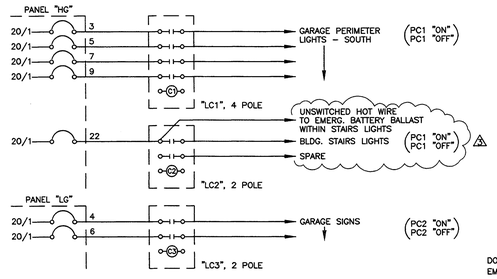

GARAGE INTERIOR/EXTERIOR LIGHTING CONTROL SCHEMATIC

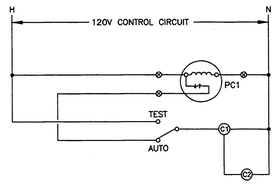

GARAGE INTERIOR/EXTERIOR LIGHTING CONTROL WIRING DIAGRAM

NOTES: GARAGE INTERIOR/EXTERIOR LIGHTING CONTROL SYSTEM

1. PROVIDE A LIGHTING CONTROL SYSTEM FOR THE PARKING STRUCTURE INTERIOR PERIMETER/EXTERIOR LIGHTS. NOTE ONLY THE ROW OF LIGHTS AT THE SOUTH SIDE OF THE GARAGE ARE CONTROLLER THROUGH THIS SYSTEM. THE REST OF THE LIGHTS ARE ON 24 HOURS A DAY.
2. MOUNT ALL CONTROL COMPONENTS, CONTACTORS, TIME CLOCKS, ETC., IN ONE SURFACE, NEMA 1, ENCLOSURE "ELCG", WITH DOOR AND LATCH AT LOCATION SHOWN ON PLANS. PROVIDE TERMINAL STRIP FOR ALL EXTERNAL CONNECTIONS.
3. PROVIDE LABELS FOR ALL CIRCUIT AND CONTROL COMPONENTS.
4. LC1, LC2, LC3 – 20A, ELECTRICALLY HELD LIGHTING CONTACTORS. POLES AS SHOWN.
PC1 – PHOTOCELL, ADJUSTABLE. MOUNT ON ROOF FACING NORTH.
ADJUST PHOTOCELLS AS INSTRUCTED IN FIELD TO ALLOW RESPECTIVE LIGHTS CONTROLLED TO SWITCH ON AT THE RIGHT LEVEL OF DARKNESS.

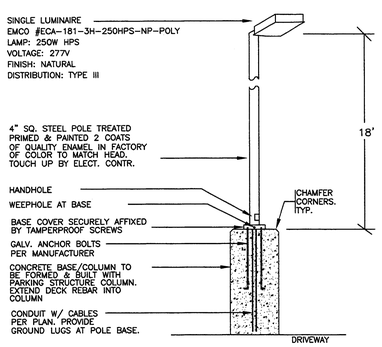

PARKING LOT LUMINAIRE

P1 1/250

SEE STRUCTURAL PLANS FOR CONTINUATION OF DECK REBAR INTO LIGHT STANDARD CONCRETE BASE & BASE REBAR.

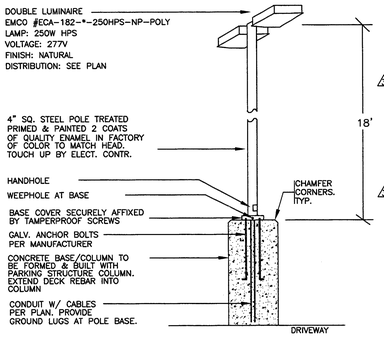

PARKING LOT LUMINAIRE

P2 2/250

SEE STRUCTURAL PLANS FOR CONTINUATION OF DECK REBAR INTO LIGHT STANDARD CONCRETE BASE & BASE REBAR.

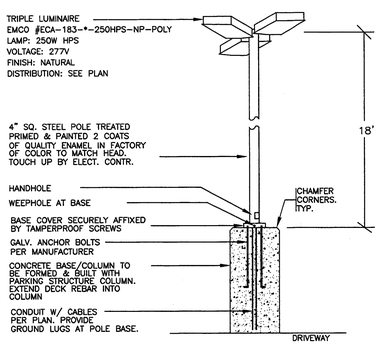

PARKING LOT LUMINAIRE

P3 3/250

SEE STRUCTURAL PLANS FOR CONTINUATION OF DECK REBAR INTO LIGHT STANDARD CONCRETE BASE & BASE REBAR.

FIXTURE SCHEDULE

SKETCH	TYPE	LAMPS	DESCRIPTION	MANUFACTURER'S NO.	BALLAST
	A	1–150W H.P.S.	SURFACE MOUNT, CUT-OFF, SILICONE GASKETED, POLYCARBONATE GARAGE FIXT. W/PRISM. UPLIGHT WINDOW & UPLIGHT/DOWNLIGHT REFLECTORS	GARDCO #GP1-150HPS-277-POLY-HPF	——
	B	1–150W H.P.S. 1–100W	SAME AS FIXT. TYPE "A" EXCEPT W/QUARTZ RESTRIKE OPTION	GARDCO #GP1-150HPS-277-QS-POLY-HPF	——
	C	2–F032T8 3500K OCTRON	4'–2 LAMP FLUOR. FIXT. W/IMPACT RESISTANT POLYCARBONATE LENS. DAMP LABEL. SURFACE	DAYBRITE #SLW232–1/2EB–277	ELECTRONIC ADVANCE #VIC–2S32
	C1	2–F032T8 3500K OCTRON	SAME AS FIXTURE TYPE "C" EXCEPT W/1–LAMP EMERGENCY BALLAST	DAYBRITE #SLW232–1/2EB–E5–277	ELECTRONIC ADVANCE #VIC–2S32
	D	2–F032T8 3500K OCTRON	4'–2 LAMP FLUOR. FIXT. W/HIGH IMPACT ACRYLIC LENS, ENCLOSED & GASKETED. DAMP LABEL. SURFACE	DAYBRITE #VD–232–277	ELECTRONIC ADVANCE #VIC–2S32
	E	4–F032T8 3500K OCTRON	8'–4 LAMP FLUOR. FIXT. W/HIGH IMPACT ACRYLIC LENS, ENCLOSED & GASKETED. DAMP LABEL. SURFACE	DAYBRITE #TVD–232–277	ELECTRONIC ADVANCE (2) #VIC–2S32
	F	2–F032T8 3500K OCTRON	4'–2 LAMP OPEN–TUBE FLUORESCENT STRIP FIXTURE. DAMP LABEL. SURFACE	DAYBRITE #T–232–277	ELECTRONIC ADVANCE #VEL –2P32–RH–TP
⚠	F2	2–F032T8 3500K OCTRON	4'–2 LAMP OPEN–TUBE FLUORESCENT STRIP FIXTURE. DAMP LABEL. SURFACE	DAYBRITE #T–232–120	ELECTRONIC ADVANCE #REL –2P32–RH–TP
	G	4–F032T8 3500K OCTRON	8'–4 LAMP OPEN–TUBE FLUORESCENT STRIP FIXTURE. DAMP LABEL. SURFACE	DAYBRITE #TT–232–277	ELECTRONIC ADVANCE #VEL –4P32–RH–TP
⚠	G2	4–F032T8 3500K OCTRON	8'–4 LAMP OPEN–TUBE FLUORESCENT STRIP FIXTURE. DAMP LABEL. SURFACE	DAYBRITE #TT–232–120	ELECTRONIC ADVANCE #REL –4P32–RH–TP
	H	2–F032T8 3500K OCTRON	4'–2 LAMP FLUOR. FIXT. W/POLYCARB. LENS, (EMERG. BALLAST,) GASKETED & ENCLOSED, WET LABEL, CEILING MOUNT	DAYBRITE #V2WPE232–277–TP–E7W	ELECTRONIC ADVANCE #VEL –2P32–RH–TP
	K	2–F032T8 3500K OCTRON	4'–2 LAMP FLUOR. FIXT. W/POLYCARB. LENS, (EMERG. BALLAST,) GASKETED & ENCLOSED, WET LABEL, WALL MOUNT	DAYBRITE #V2WPE232–277–TP–E7W	ELECTRONIC ADVANCE #VEL –2P32–RH–TP
	L	1–150W H.P.S.	WALL MOUNT, HIGH PRESSURE SODIUM SCONCE. FINISH PER ARCHITECT. WET LABEL.	McPHILBEN #104–WT–150HPS–277–* *FINISH PER ARCHITECT	——
	M	2–F032T8 3500K OCTRON	4'–2 LAMP FLUOR. FIXT. W/ ACRYLIC PRISMATIC LENS. WALL MOUNT	DAYBRITE #CD232*–277 *FINISH PER ARCHITECT	ELECTRONIC ADVANCE #VEL –2P32–RH–TP
⚠	N	1–150W INCAND.	WALL MOUNT INCAND. FIXT. W/GLASS CYLINDER & GLOBE GUARD	HUBBELL #VW–151 W/VCG–15	——
——	⊗	——	L.E.D. SINGLE FACE EXIT SIGN W/EMERG. BATTERY PACK, VANDAL RESISTANT LENS, TAMPERPROOF SCREWS. CEILING MOUNT. RED LETTERS, ALUM. BODY. DAMP LABEL	McPHILBEN #ER55L–1–12/27–A–R–TP–DL–VL	——
——	⊗	——	L.E.D. SINGLE FACE EXIT SIGN W/EMERG. BATTERY PACK, VANDAL RESISTANT LENS, TAMPERPROOF SCREWS. WALL MOUNT. RED LETTERS, ALUM. BODY. DAMP LABEL	McPHILBEN #ER55L–1–12/27–A–R–TP–DL–VL	——
——	W	——	L.E.D. SINGLE FACE EXIT SIGN W/EMERG. BATTERY PACK, CORROSION RESISTANT, FULLY GASKETED. WALL MOUNT. RED LETTERS, ALUM. BODY. WET LABEL	McPHILBEN #ER60L–W–1–12/27–S–R–TP	——
——		2–9W 6V LIGHT HEADS	EMERGENCY LIGHT UNIT W/ BATTERY POWER PACK & 2– LIGHT HEADS	EMERGILITE #ECS–2 W/EF 23 (ZD) HEADS	——
⚠		(2)18W, 24V H.I.T. LIGHT HEADS	24V, REMOTE, DOUBLE HEAD EMERGENCY LIGHT FIXTURE, FULLY ADJUSTABLE. WALL MOUNT	EMERGILITE #24 VOLTS–EF28D(U)–218 WATTS	——
——	EPC	24V, 1000W	EMERGENCY POWER CABINET, W/BATTERIES, 24V, 1000W. NEMA 1, WALL MOUNT ENCLOSURE	EMERGILITE #120–SG–1000–WR–24–MR/4–CB015–90	——

LEGEND

(A)	FLUORESCENT LIGHT FIXTURE, SURFACE MOUNT (CAP. LETTER=TYPE)
	LIGHT FIXTURE WITH BATTERY BACKUP FOR EMERGENCY LIGHTING (SM. LETTER=SWITCHING NUMBER=CIRCUIT)
	CEILING LIGHT FIXTURE
WH	WALL BRACKET LIGHT FIXTURE
	EXIT LIGHT
(A/2)	ALTERNATE DESIGNATION OF LIGHT FIXTURE SHOWING TYPE & LAMPS
$	LIGHT SWITCH – SPST UP 48" U.O.N. FLUSH
$3	LIGHT SWITCH – 3–WAY
	120 VOLT DUPLEX WALL OUTLET UP 15" U.O.N.
	120 VOLT FOURPLEX OUTLET
	SPECIAL PURPOSE OUTLET. TYPE & RATING TO SUIT LOAD SERVED
J	JUNCTION BOX
	FUSED DISCONNECT SWITCH
	MANUAL MOTOR STARTER/DISCONNECT
	TIME CLOCK
	EXHAUST FAN
M	MOTOR OUTLET
	CONDUIT CONCEALED IN WALL, CEILING OR FLOOR SLAB (MIN. SIZE=1/2"C NOS=NO. OF #12 WIRES NO TICS=2#12 U.O.N.)
	CONDUIT WITH INSULATED GREEN GROUND WIRE
	CONDUIT CONCEALED UNDERGROUND
	FLEXIBLE CONDUIT FOR LIGHTING ABOVE CEILING
	DISTRIBUTION PANEL
	LIGHTING PANEL
	SIGNAL CABINET AS DESIGNATED
NL	NIGHT LIGHT, UNSWITCHED
U.O.N.	UNLESS OTHERWISE NOTED
CO	CONDUIT ONLY
WP	WEATHERPROOF
GFI	GROUND FAULT INTERRUPTER
SD	FIRE ALARM SYSTEM SMOKE DETECTOR, CEILING MOUNT
HD	FIRE ALARM SYSTEM HEAT DETECTOR, CEILING MOUNT
SD	HVAC DUCT SMOKE DETECTOR
S/F	HVAC COMBINATION SMOKE/FIRE DAMPER
	FIRE ALARM SYSTEM END–OF–LINE DEVICE
–F–	FIRE ALARM SYSTEM CONDUIT & CABLES AS REQUIRED
CR	CARD READER (BY OTHERS)

This set of plans and details is the property of the Architect and is not to be used in any way without the written consent of the Architect. Visual contact with these plans shall constitute prima facie evidence of acceptance of these restrictions. Any violations of any Ordinance or Law, Occupancy of structure not permitted until after final approval.

JOB SITE COPY

PLANS REVIEWED BY Precision Inspection Company Inspection and Consulting Services Page 13 of 21

ENGLISH HARPER RETA
ARCHITECTS

580 UNIVERSITY AVENUE SUITE 100
SACRAMENTO, CA 95825 (916) 568–1821

THIS DRAWING IS NOT FINAL OR TO BE USED FOR CONSTRUCTION UNTIL IT IS SIGNED BY THE ARCHITECT AND THE OWNER.

ARCHITECT
EDWARD P. ENGLISH C–10399
RICHARD L. HARPER C–13830
RONALD A. RETA C– 9879

OWNER

CONTRACTOR

LICENSED ARCHITECT EDWARD P. ENGLISH RENEWAL 3-31-01 STATE OF CALIFORNIA

Turner CONSTRUCTION COMPANY

HCS ENGINEERING, INC.
CONSULTING ELECTRICAL ENGINEERS
4651 QUAIL LAKES DRIVE
STOCKTON, CA 95207 (209)478–8270
PROJ. 99133 DES. CML ENG. BP

REGISTERED PROFESSIONAL ENGINEER BRIAN P. MCGRATH No. 012571 Exp. 9-30-03 ELECTRICAL STATE OF CALIFORNIA

Essential Services Facility (UNDER SEPARATE DOCUMENT PACKAGE)

KEY PLAN

DATE	NO.	DESCRIPTION
1–13–2000	3	OVERALL PERMIT SET
11–15–99	2	OVERALL PLANCHECK SET
10–18–99	1	PROGRESS SET

REVISIONS
DRAWN BY CML
CHECKED BY

Parking Garage
City of Stockton, California
G.M.P. BID SET

DRAWING
SCHEDULES, LEGEND, NOTES & DETAILS

PROJECT NO. 98113
DRAWING NO. E4.01G
CADFILE E4_01G
DATE 7 SEPTEMBER 1999

1–11–00 COLLINS\EST\ELEC\00\DRAWE\E4_01G

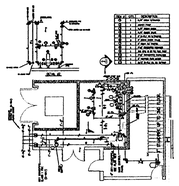

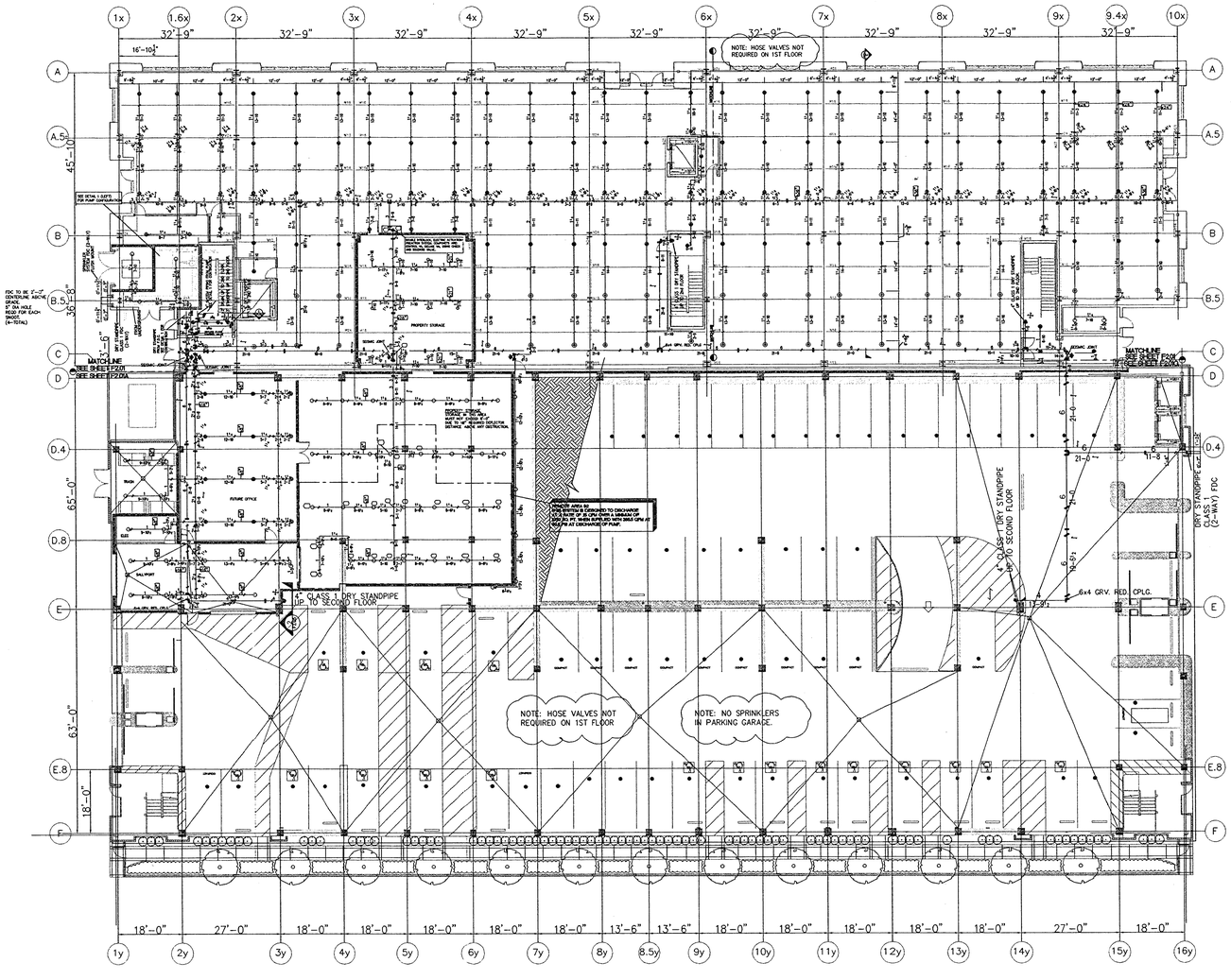

GROUND FLOOR PLAN

SCALE: 1/16" = 1'-0"

This set of plans and calculations MUST be kept on the job site at all times. [illegible]

The [illegible] NOT be held to permit or to be an approval of the violation of any provisions of any Ordinance or Law. Occupancy of structure not permitted until after final approval.

JOB SITE COPY

PLANS REVIEWED BY
Precision Inspection Company
Inspection and Consulting Services
Page 74 of 79

SEE SHEET F2.06G FOR DETAILS AND GENERAL NOTES

SCALE: 1/16" = 1'-0"

ENGLISH HARPER RETA
ARCHITECTS

580 UNIVERSITY AVENUE SUITE 100
SACRAMENTO, CA 95825 (916) 568-1821

THIS DRAWING IS NOT FINAL OR TO BE USED FOR CONSTRUCTION UNTIL IT IS SIGNED BY THE ARCHITECT AND THE OWNER.

ARCHITECT
EDWARD P. ENGLISH C-10399
RICHARD L. HARPER C-13830
RONALD A. RETA C- 9879

OWNER

CONTRACTOR

Turner Construction Company

FOR REFERENCE ONLY
NOT PART OF CORE & SHELL PERMIT
(SEPARATE FUTURE PERMIT)

Safeguard Protecting Life & Property
Fire Protection Inc.
8270 Belvedere Ave. Sacramento, Ca. 95826 (916) 457-6690

LICENSED FIRE PROTECTION CONTRACTOR
SAFEGUARD FIRE PROTECTION INC.
Classification C-16
License No. 748833
STATE of CALIFORNIA

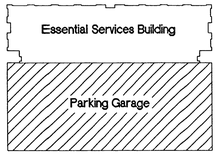

KEY PLAN

DATE	NO.	DESCRIPTION
1-13-00	3	OVERALL PERMIT SET
12-1-99	2	SUBMITTAL TO FIRE DEPARTMENT
10/18/99	1	PROGRESS SET

REVISIONS

DRAWN BY
DARREL JACOBS

CHECKED BY

Essential Services Building
City of Stockton, California

DRAWING
GROUND FLOOR PARKING PLAN

PROJECT NO. 98113
CADFILE
DATE 12-1-99
DRAWING NO. F2.01G

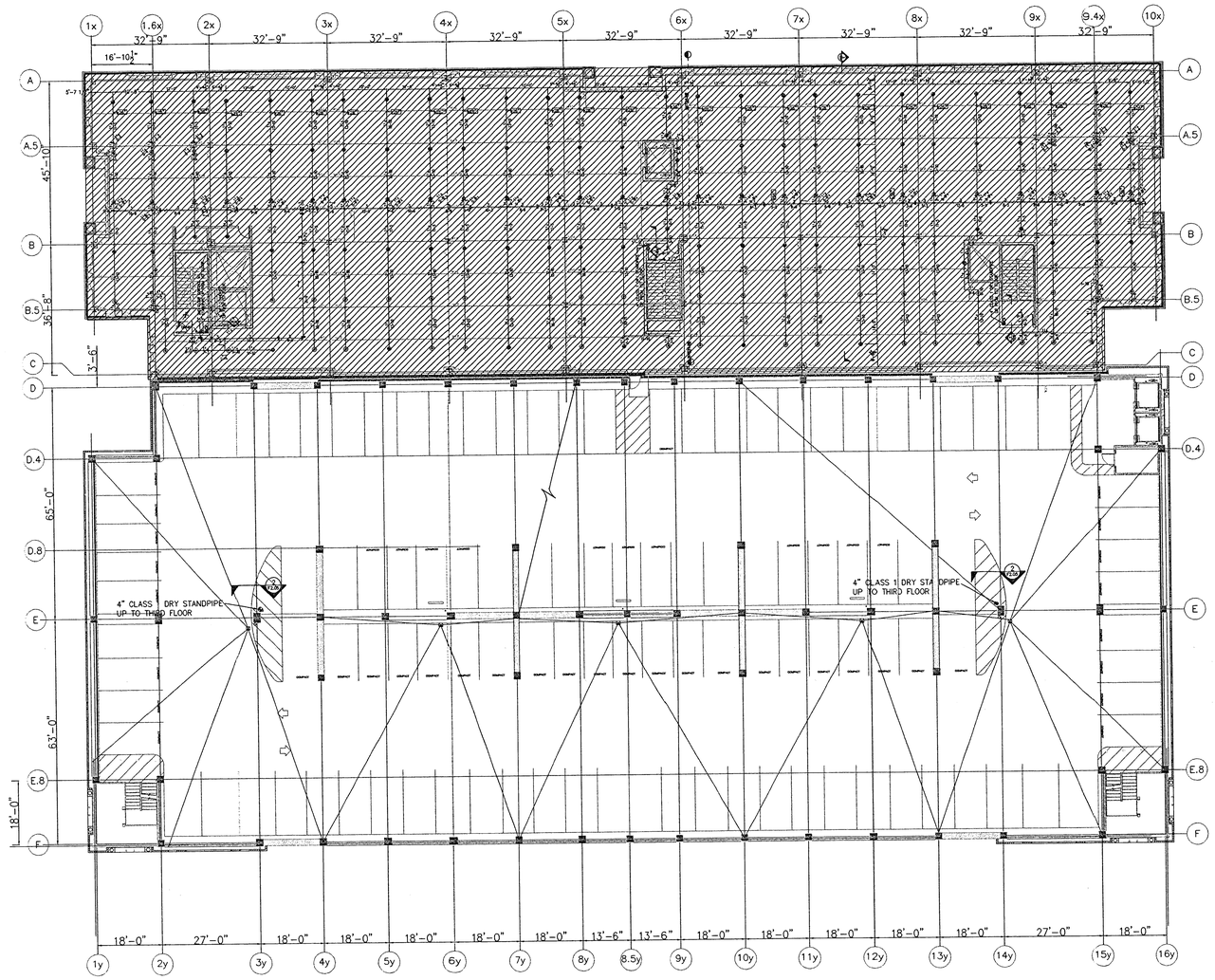

SECOND FLOOR PLAN

SCALE: 1/16"=1'-0"

SEE SHEET F2.06G FOR DETAILS AND GENERAL NOTES

SCALE: 1/16" = 1'-0"

ENGLISH HARPER RETA
ARCHITECTS

580 UNIVERSITY AVENUE SUITE 100
SACRAMENTO, CA 95825 (916) 568-1821

THIS DRAWING IS NOT FINAL OR TO BE USED FOR CONSTPUCTION UNTIL IT IS SIGNED BY THE ARCHITECT AND THE OWNER.

ARCHITECT
EDWARD P. ENGLISH C-10399
RICHARD L. HARPER C-13830
RONALD A. RETA C- 9879

OWNER

CONTRACTOR

Turner Construction Company

FOR REFERENCE ONLY
NOT PART OF CORE & SHELL PERMIT
(SEPARATE FUTURE PERMIT)

Safeguard Protecting Life & Property
Fire Protection Inc.
8270 Belvedere Ave. Sacramento, Ca. 95826 (916) 457-6690

LICENSED FIRE PROTECTION CONTRACTOR
SAFEGUARD FIRE PROTECTION INC.
Classification C-16
License No. 740833
STATE of CALIFORNIA

Essential Services Building
Parking Garage

KEY PLAN

DATE	NO.	DESCRIPTION
1-13-00	3	OVERALL PERMIT SET
12-1-99	2	SUBMITTAL TO FIRE DEPARTMENT
10/18/99	1	PROGRESS SET

REVISIONS

DRAWN BY
DARREL JACOBS

CHECKED BY

This approval of these plans and specifications SHALL NOT be held to permit or to be construed to be a violation of any provisions of any Ordinance or Law. Occupancy of structure not permitted until after final approval.

JOB SITE COPY

PLANS REVIEWED BY
Precision Inspection Company
Inspection and Consulting Services
Page 25 of 29

Essential Services Building
City of Stockton, California

DRAWING

SECOND FLOOR PARKING PLAN

PROJECT NO. 98113
CADFILE
DATE 12-1-99

DRAWING NO. F2.02G

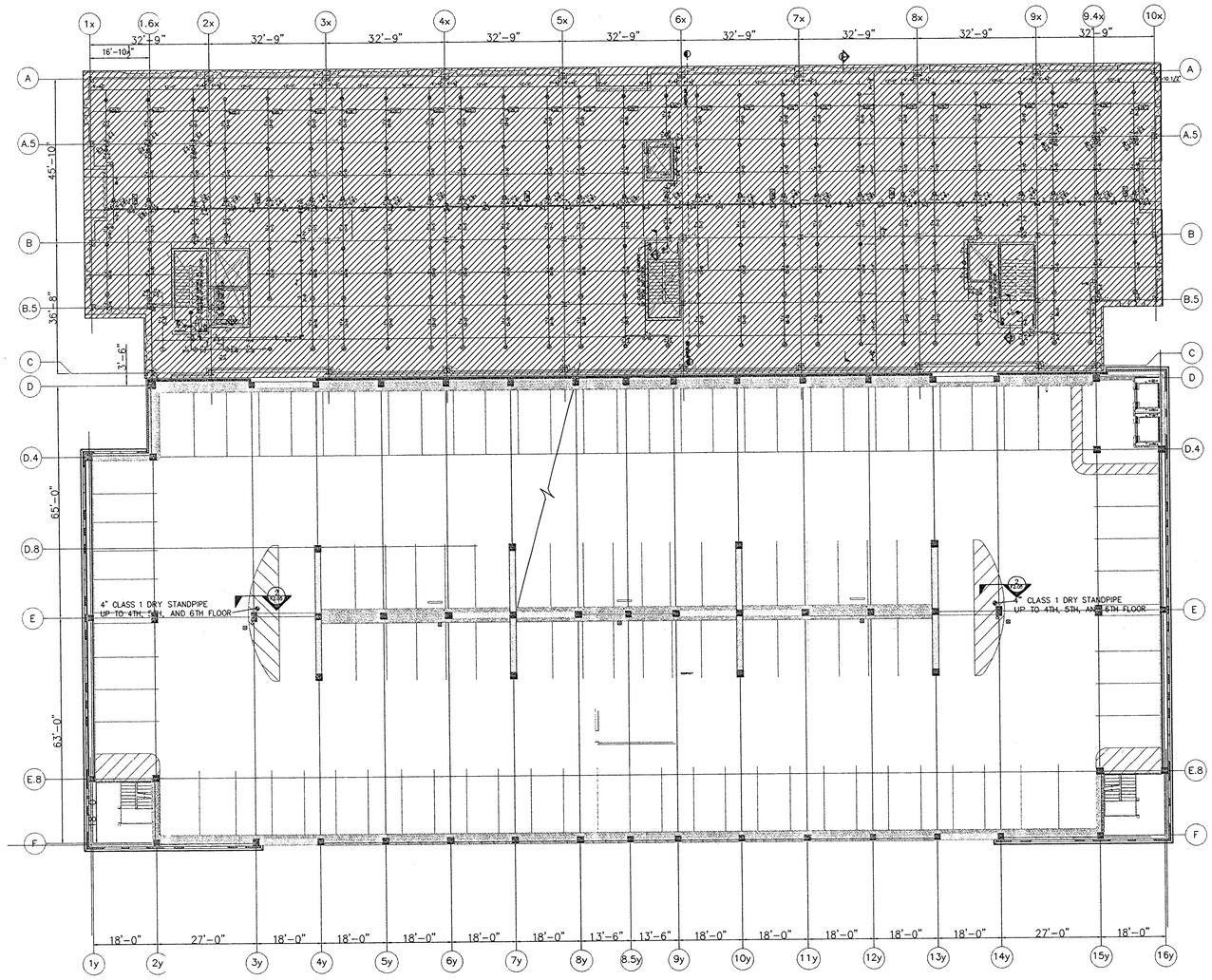

3RD, 4TH, 5TH and 6TH LEVELS OF PARKING

SCALE:1/16"=1'-0"

The stamping of these plans shall not be held to permit or be an approval of the violation of any provisions of any Ordinance or Law. Occupancy or structure not permitted until after final approval.

JOB SITE COPY

PLANS REVIEWED BY
Precision Inspection Company
Inspection and Consulting Services
Page 1 of 1

SEE SHEET F2.06G FOR DETAILS AND GENERAL NOTES

SCALE:1/16" = 1'-0"

ENGLISH HARPER RETA
ARCHITECTS

580 UNIVERSITY AVENUE SUITE 100
SACRAMENTO, CA 95825 (916) 568-1821

THIS DRAWING IS NOT FINAL OR TO BE USED FOR CONSTRUCTION UNTIL IT IS SIGNED BY THE ARCHITECT AND THE OWNER.

ARCHITECT
EDWARD P. ENGLISH C-10399
RICHARD L. HARPER C-13830
RONALD A. RETA C- 9879

OWNER

CONTRACTOR

Turner Construction Company

FOR REFERENCE ONLY
NOT PART OF CORE & SHELL PERMIT
(SEPARATE FUTURE PERMIT)

Safeguard Protecting Life & Property
Fire Protection Inc.
8270 Belvedere Ave. Sacramento, Ca. 95826 (916) 457-5590

LICENSED FIRE PROTECTION CONTRACTOR
SAFEGUARD FIRE PROTECTION, INC.
Classification C-16
License No. 748833
STATE of CALIFORNIA

Essential Services Building

Parking Garage

KEY PLAN

DATE	NO.	DESCRIPTION
1-13-00	3	OVERALL PERMIT SET
12-1-99	2	SUBMITTAL TO FIRE DEPARTMENT
10/18/99	1	PROGRESS SET

REVISIONS

DRAWN BY
DARREL JACOBS

CHECKED BY

Essential Services Building
City of Stockton, California

DRAWING

3RD, 4TH, 5TH AND 6TH FLOOR PARKING PLAN

PROJECT NO. 98113
CADFILE

DRAWING NO. F2.03G

DATE 12-1-99

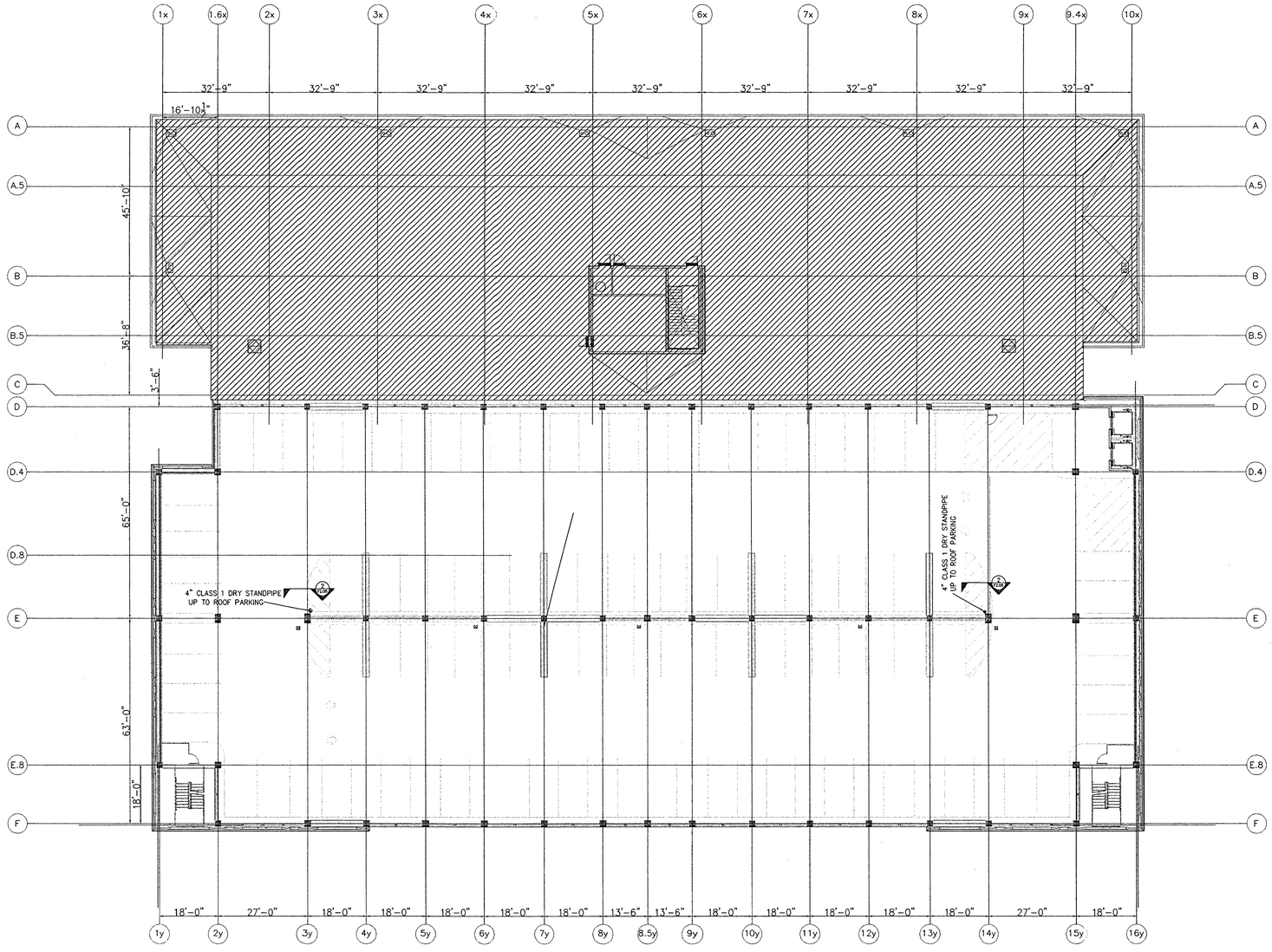

SEVENTH LEVEL PARKING

SCALE: 1/16" = 1'-0"

This set of plans and calculations MUST be kept on the job at all times [illegible] Stockton.

The [illegible] SHALL NOT be held to [illegible] of any provisions of any Ordinance or Law. Occupancy of structure not permitted until after final approval.

JOB SITE COPY

PLANS REVIEWED BY
Precision Inspection Company
Inspection and Consulting Services
Page 77 Of 79

SEE SHEET F2.06G FOR DETAILS AND GENERAL NOTES

SCALE: 1/16" = 1'-0"

ENGLISH HARPER RETA
ARCHITECTS

580 UNIVERSITY AVENUE SUITE 100
SACRAMENTO, CA 95825 (916) 568-1821

THIS DRAWING IS NOT FINAL OR TO BE USED FOR CONSTRUCTION UNTIL IT IS SIGNED BY THE ARCHITECT AND THE OWNER.

ARCHITECT
EDWARD P. ENGLISH C-10399
RICHARD L. HARPER C-13830
RONALD A. RETA C- 9879

OWNER

CONTRACTOR

Turner Construction Company

FOR REFERENCE ONLY
NOT PART OF CORE & SHELL PERMIT
(SEPARATE FUTURE PERMIT)

Safeguard Protecting Life & Property
Fire Protection Inc.
8270 Belvedere Ave. Sacramento, Ca. 95826 (916) 457-6690

LICENSED FIRE PROTECTION CONTRACTOR
SAFEGUARD FIRE PROTECTION INC.
Classification C-16
License No. 748833
STATE of CALIFORNIA

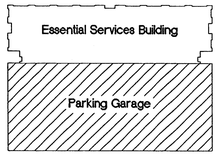

KEY PLAN

DATE	NO.	DESCRIPTION
1-13-00	3	OVERALL PERMIT SET
12-1-99	2	SUBMITTAL TO FIRE DEPARTMENT
10/18/99	1	PROGRESS SET

REVISIONS

DRAWN BY
DARREL JACOBS

CHECKED BY

Essential Services Building
City of Stockton, California

DRAWING

SEVENTH FLOOR PARKING PLAN

PROJECT NO. 98113

CADFILE

DATE 12-1-99

DRAWING NO. F2.04G

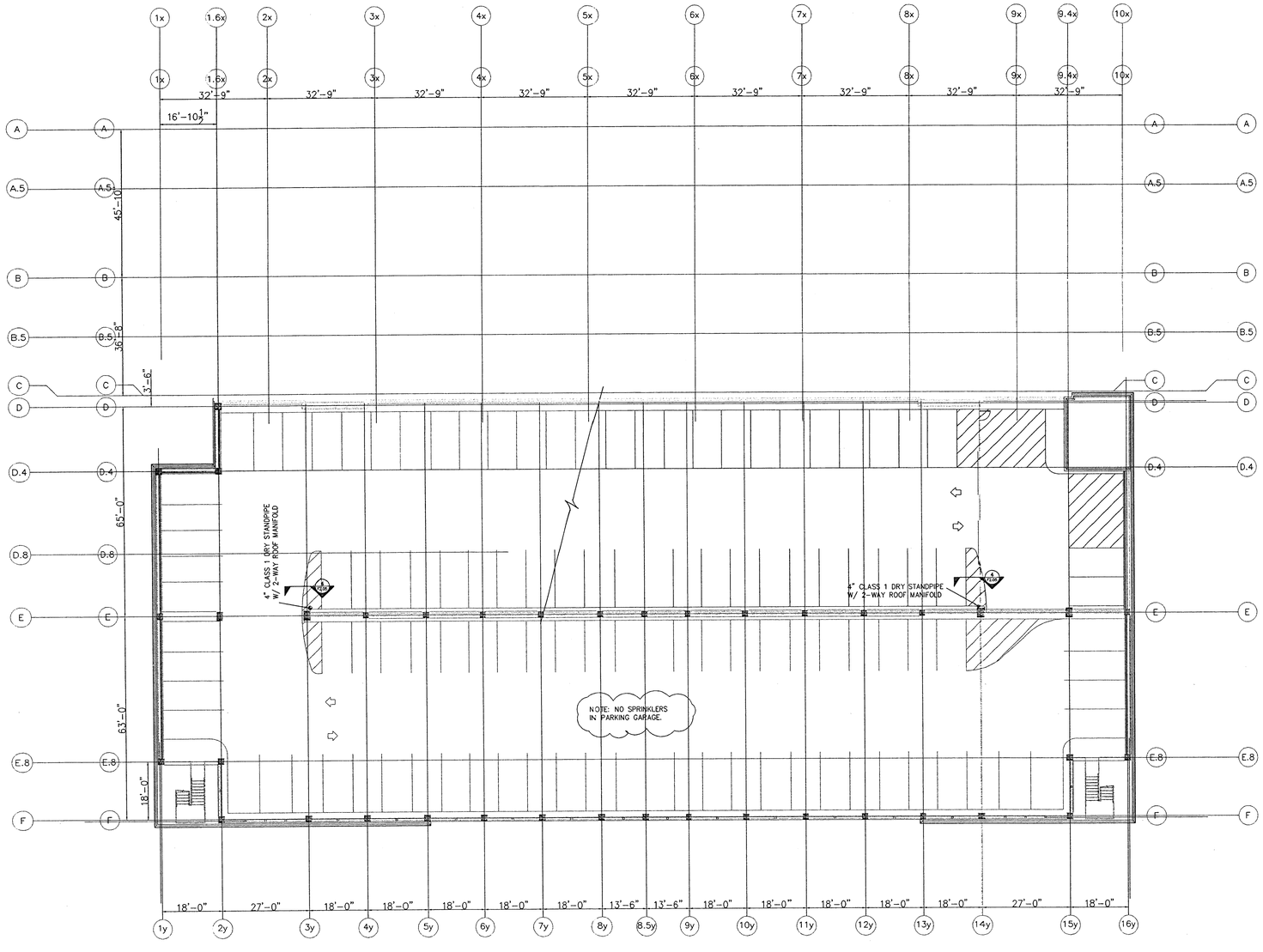

ROOF PARKING PLAN
SCALE:1/16"=1'-0"

This set of plans and specifications is not to be used on the site and shall be kept on file in the office of the Architect. It is a violation of law for any person, unless he is acting under the direction of a licensed architect, engineer or contractor, to alter any item on these plans. Only items with ink signatures and seals are approved. Verbal approval is not valid approval.

JOB SITE COPY

PLANS REVIEWED BY
Precision Inspection Company
Inspection and Consulting Services
Page 112 of 154

SEE SHEET F2.06G FOR DETAILS AND GENERAL NOTES

SCALE: 1/16" = 1'-0"

ENGLISH HARPER RETA
ARCHITECTS

580 UNIVERSITY AVENUE SUITE 100
SACRAMENTO, CA 95825 (916) 568-1821

THIS DRAWING IS NOT FINAL OR TO BE USED FOR CONSTRUCTION UNTIL IT IS SIGNED BY THE ARCHITECT AND THE OWNER.

ARCHITECT
EDWARD P. ENGLISH C-10399
RICHARD L. HARPER C-13830
RONALD A. RETA C- 9879

OWNER

CONTRACTOR

Turner Construction Company

FOR REFERENCE ONLY
NOT PART OF CORE & SHELL PERMIT
(SEPARATE FUTURE PERMIT)

Safeguard Protecting Life & Property
Fire Protection Inc.
8270 Belvedere Ave. Sacramento, Ca. 95826 (916) 457-6690

LICENSED FIRE PROTECTION CONTRACTOR
Classification C-16
License No. 748833
STATE of CALIFORNIA

Essential Services Building
Parking Garage

KEY PLAN

DATE	NO.	DESCRIPTION
1-13-00	3	OVERALL PERMIT SET
12-1-99	2	SUBMITTAL TO FIRE DEPARTMENT
10/18/99	1	PROGRESS SET

REVISIONS
DRAWN BY
DARREL JACOBS
CHECKED BY

Essential Services Building
City of Stockton, California

DRAWING
ROOF PARKING PLAN

PROJECT NO. 98113
CADFILE
DATE 12-1-99
DRAWING NO. F2.05G

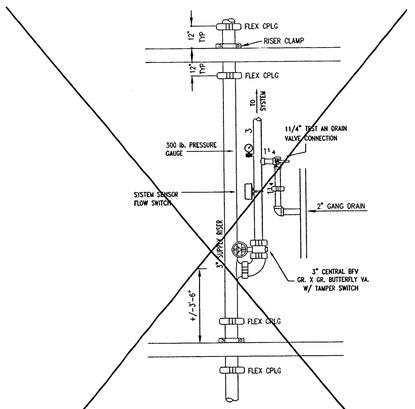

TYPICAL FLOOR CONTROL VALVE
NTS

DETAIL #1

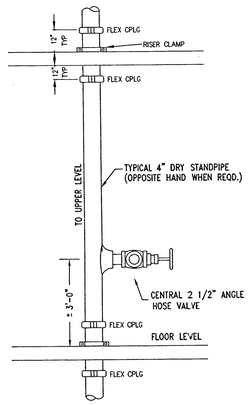

TYPICAL DRY STANDPIPE DETAIL
NTS

DETAIL #2

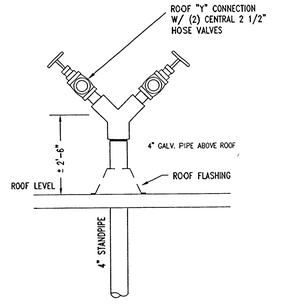

TYPICAL ROOF MANIFOLD AT GARAGE AND OFFICE BLDG.

DETAIL #4

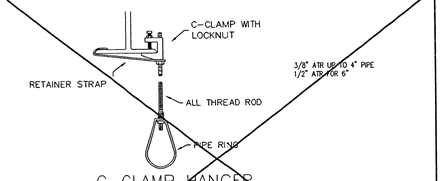

C-CLAMP HANGER W./RETAINER STRAP

HANGER UNIT #4

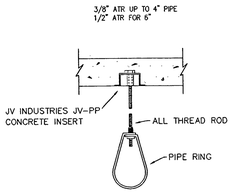

CONCRETE INSERT
USED AT PARKING GARAGE

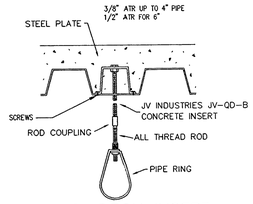

CONC. DECK INSERT
USED AT OFFICE BLDG.

HANGER UNIT #10

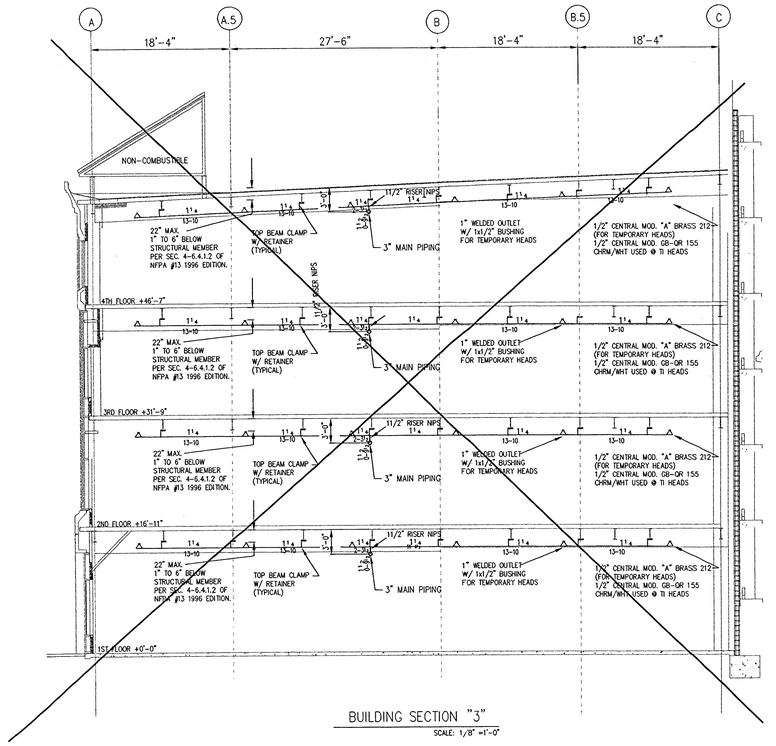

BUILDING SECTION "3"
SCALE: 1/8" =1'-0"

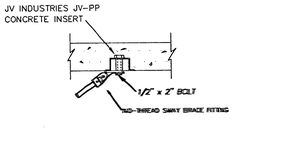

JV INDUSTRIES JV-PP CONCRETE INSERT FOR 1/2" ATR IS U.L. LISTEDFOR A MAX. LOAD OF 4050 lbs.

SEE BELOW FOR ACTUAL LOAD REQUIRED AND CONFIGURATION OF EARTHQUAKE BRACE.

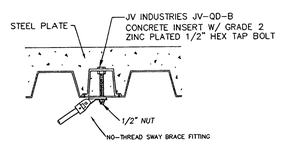

JV INDUSTRIES JV-PP CONCRETE INSERT FOR 1/2" ATR IS U.L. LISTED FOR A MAX. LOAD OF 4050 lbs.

SEE BELOW FOR ACTUAL LOAD REQUIRED AND CONFIGURATION OF EARTHQUAKE BRACE.

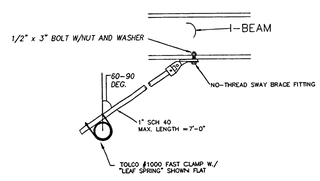

LATERAL SWAY BRACE

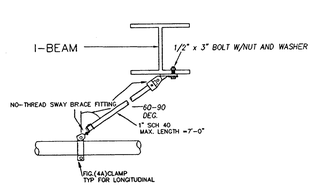

LONGITUDINAL SWAY BRACE

METHOD OF ATTACHMENT WILL BE 1/2" x 3" THROUGH BOLT IN STEEL. PER N.F.P.A. #13 1996 TABLE 4-6.4.3.5.4 USING FIG "C" ALLOWABLE LOAD IS 2550lbs.

ZONE OF INFLUENCE CALCULAIONS FOR LATERAL BRACE...

QTY	PIPESIZE	1/2 WT. WATER FILLED PIPE	WEIGHT
40'	3"	3.97lbs	158.8lbs
210'	1.25"	1.47lbs	308.7lbs
110'	1"	.91lbs	100.1lbs (FUTURE)

TOTAL = 567.6lbs

ZONE OF INFLUENCE CALCULAIONS FOR LONGITUDINAL BRACE...

QTY	PIPESIZE	1/2 WT. WATER FILLED PIPE	TOTAL WEIGHT
80'	6"	11.52lbs	921.6lbs

TOTAL = 921.6lbs

EARTHQUAKE BRACING DETAILS

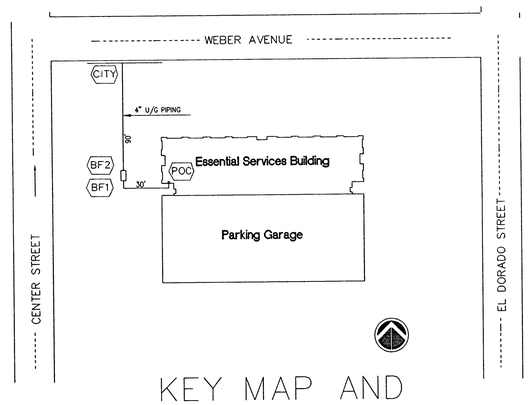

KEY MAP AND UNDERGROUND SCHEMATIC

LEGEND

—	DENOTES	HANGER DETAIL "4"
//	"	HANGER DETAIL "10"
X	"	
⊥	"	HANGER DETAIL"4" W/ 6" ATR OR LESS TO ACT AS LATERAL BRACE
XX	"	
*0"	"	DISTANCE CENTERLINE OF PIPE TO ROOF DECK OR BOTTOM OF SLAB
+0'0"	"	DISTANCE CENTERLINE OF PIPE ABOVE FINISHED FLOOR
⤻	"	LATERAL OR LONGITUDINAL EARTHQUAKE BRACE
⊹	"	4-WAY EARTHQUAKE BRACE

This set of plans and specifications [illegible] and it is unlawful to make changes [illegible] written permission [illegible] APPROVED [illegible] By [illegible]

The approval of these plans and specifications [illegible] permit to be issued [illegible] of any Ordinance of the [illegible] final approval.

GENERAL NOTES:

JOB SITE COPY

1) THIS SYSTEM IS DESIGNED TO MEET ALL REQUIREMENTS OF N.F.P.A. #13 1996 EDITION AND THE LOCAL AUTHORITY HAVING JURISDICTION.
2) ALL 2 " AND LARGER PIPING TO BE SUPER FLO/ DYNA-FLOW.
3) ALL 11/2" AND SMALLER PIPING TO BE SUPER 40 / DYNA-THREAD.
4) ALL SCREWED FITTINGS TO BE CAST OR DUCTILE IRON.
5) ALL GROOVED FITTINGS TO BE CENTRAL SPRINKLINE.
6) OFFICE BUILDING PROVIDED WITH UPRIGHT SPRINKLER HEADS SPACED TO THE BEAMS IN 1x1/2" BUSHINGS TO ALLOW REMOVAL FOR FUTURE DROPS.
7) SAFEGUARDS' WORK SHALL START 6" ABOVE FLOOR INSIDE THE BUILDING.
8) EXCLUSIONS: PERMITS AND FEES, ELECTRICAL WIRING OR SUPERVISORY SYSTEM, CLEANING, PAINTING OR PRIMING OF PIPING, STRUCTURAL CALCULATIONS FIRE SPRINKLERS IN PARKING GARAGE,ACCESS PANELS, FIRE PUMP PAD DRAIN, LIGHT, HEATER, VENTILATION, WATER STORAGE TANK, FIRE EXTINGUISHERS AND HOSE RACKS, FREEZE PROTECTION, UNDERGROUND INCLUDING BACK FLOW DEVICE, PIV AND FDC, AND BOND.

PLANS REVIEWED BY
Precision Inspection Company
Inspection and Consulting Services
Page 1 OF 1

ENGLISH HARPER RETA
ARCHITECTS

580 UNIVERSITY AVENUE SUITE 100
SACRAMENTO, CA 95825 (916) 568-1821

THIS DRAWING IS NOT FINAL OR TO BE USED FOR CONSTRUCTION UNTIL IT IS SIGNED BY THE ARCHITECT AND THE OWNER.

ARCHITECT
EDWARD P. ENGLISH C-10399
RICHARD L. HARPER C-13830
RONALD A. RETA C- 9879

OWNER

CONTRACTOR

Turner Construction Company

Safeguard Protecting Life & Property
Fire Protection Inc.
8270 Belvedere Ave. Sacramento, Ca. 95826 (916) 457-6690

LICENSED FIRE PROTECTION CONTRACTOR
AUTOMATIC FIRE PROTECTION SYSTEMS
Classification C-16
License No. 748683
STATE of CALIFORNIA

FOR REFERENCE ONLY
NOT PART OF CORE & SHELL PERMIT
(SEPARATE FUTURE PERMIT)

KEY PLAN

DATE	NO.	DESCRIPTION
1-13-2000	3	OVERALL PERMIT SET
12-1-99	2	SUBMITTAL TO FIRE DEPARTMENT
10/18/99	1	SUBMITTAL TO FIRE DEPARTMENT

REVISIONS

DRAWN BY
DARREL JACOBS

CHECKED BY

Essential Services Building
City of Stockton, California

DRAWING

DETAILS AND SECTIONS

PROJECT NO. 98113
CADFILE
DATE 12-1-99

DRAWING NO. F2.06G

Parking Garage

15 North El Dorado Street, Stockton, California

Overall Permit Set
JANUARY 13, 2000

"The Policy of the Stockton Fire Department is that all plans for required fire suppression systems shall be submitted and approved prior to the framing inspection. If plans are not submitted and approved by this time, then the project will be halted until such time as the plans are approved. All required fire alarm system plans must be submitted prior to the sheetrock nailing inspection. (Exception: Open-framed buildings where sprinkler piping will be exposed in a warehouse type use will be required to have their suppression and alarm system plans submitted and approved and the systems installed prior to the final inspection.) No final inspection will be made or [illegible] of Occupancy issued until the above conditions are met."

STOCKTON FIRE DEPARTMENT REQUIREMENT:
FIRE ACCESS ROADS AND FIRE HYDRANTS MUST BE INSTALLED AND MAINTAINED SERVICEABLE DURING COMBUSTIBLE CONSTRUCTION

General Contractor
TURNER CONSTRUCTION COMPANY
1450 Harbor Blvd., Suite A
West Sacramento, CA 95691
(916)372-9500

Civil Engineer
KJELDSEN, SINNOCK & NEUDECK, INC.
711 N. Pershing Ave.
Stockton, CA 95201-0844
(209)946-0268

Architect
ENGLISH HARPER RETA ARCHITECTS, INC.
580 University Avenue Suite 100
Sacramento, CA 95825-6512
(916) 568-1821

Structural Engineer
BUEHLER AND BUEHLER ASSOCIATES
7300 Folsom Blvd. Suite 103
Sacramento, CA 95826
(916) 381-8181

Mechanical Engineer
FRANK M. BOOTH, INC.
2404 Professional Drive
Roseville, CA 95661
(916) 784-0777

Electrical Engineer
COLLINS ELECTRIC
611 W. Fremont Street
Stockton, CA 95203
(209)466-3691

Fire Protection Engineer
SAFEGUARD FIRE PROTECTION INC.
8270 Belvedere Ave. #100
Stacramento, CA 95826
(916)457-6690

REPLACE ALL HAZARDOUS BROKEN OR RAISED CURB, GUTTER AND SIDEWALK.

– DISABLED ACCESS –
IT IS YOUR RESPONSIBILITY TO COMPLY WITH HANDICAP/DISABLED ACCESS CODES TO AREA OF [illegible] IMPROVEMENT INCLUDING SITE ACCESS, REST ROOMS, AND PUBLIC TELEPHONES.

PLEASE BE ADVISED WHEN CALLING FOR A FOUND[illegible] YOU MUST [illegible] SOILS REPORT ON THE JOB-SITE WITH THE APPROVED SET OF PLANS

-X- APPROVED SUBJECT TO RFI CHANGES

This set of plans and calculations MUST be kept on the job at all times and it is unlawful to make any changes or alterations on same without written consent from Building Inspection, City of Stockton. [illegible] 3/21/00 99-5771

The stamping of [illegible] hold to permit or to [illegible] of any Ordinance or Law. [illegible] unit after final approval.

OFFICE COPY

PLANS REVIEWED BY
Precision Inspection Company
Inspection and Consulting Services
Page 1 of 79

99-5771

PARKING GARAGE - OVERALL PERMIT SET 1-13-00

OFFICE COPY

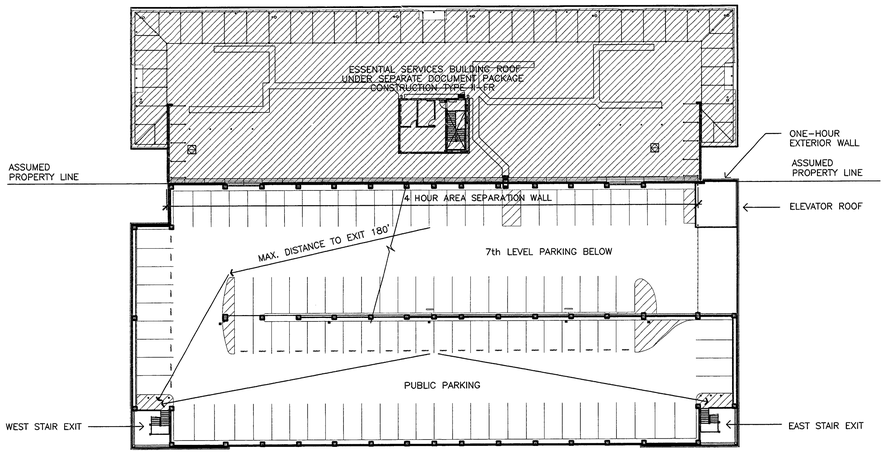

8th FLOOR - ROOF LEVEL

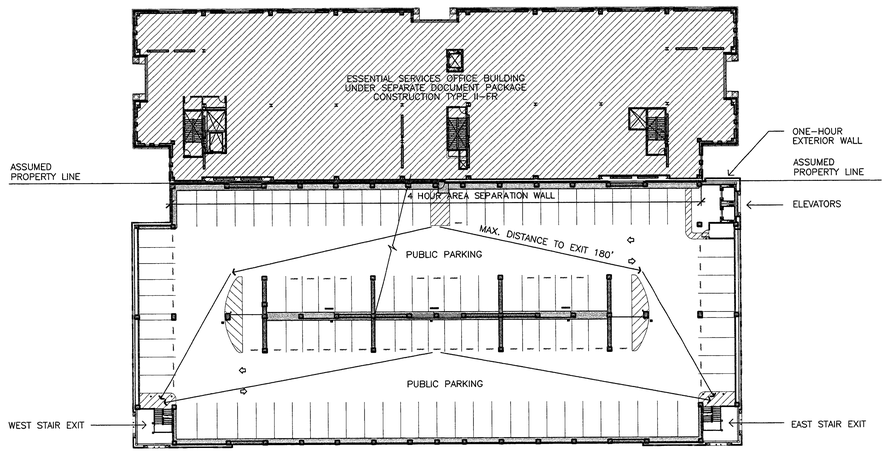

FLOORS 2-7

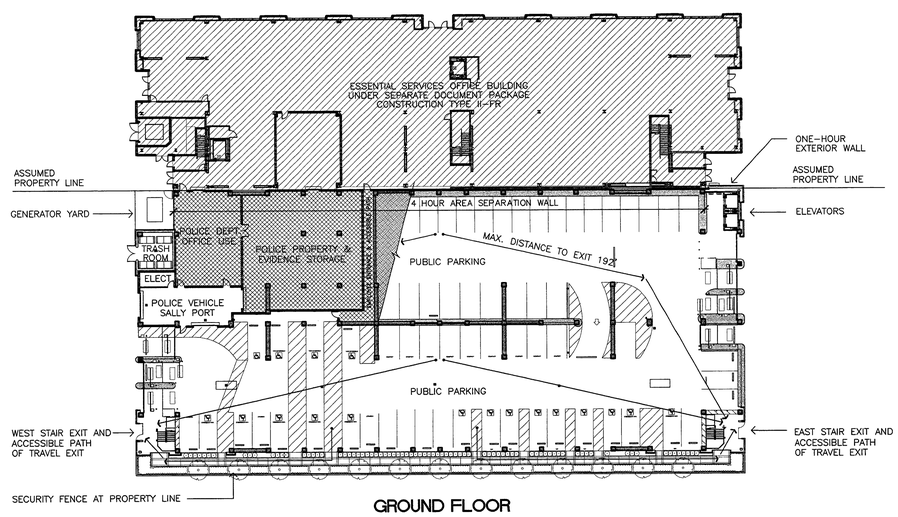

GROUND FLOOR

B A0.01G **CODE DIAGRAM** 1"=30'

PARKING GARAGE CODE DATA

BUILDING INFORMATION

CONSTRUCTION TYPE:	II-N
PRIMARY OCCUPANCY GROUP:	S4 (RAMP ACCESS OPEN GARAGE)
SECONDARY OCCUPANCY GROUP:	S1 (PROPERTY STORAGE) / B (OFFICE)
AUTO. FIRE SP. SYST. IN PROPERTY STORAGE & OFFICE SPACE	
DRY STANDPIPE FIRE PROTECTION SYSTEM IN OPEN PARKING GARAGE	

APPLICABLE CODES

1997 UNIFORM BUILDING CODE
1997 UNIFORM FIRE CODE
1997 UNIFORM MECHANICAL CODE
1997 UNIFORM PLUMBING CODE
1996 NATIONAL ELECTRICAL CODE

MAXIMUM ALLOWABLE BUILDING AREA CALCULATION

BASIC ALLOWABLE AREA PER TIER (TABLE 3-H)	30,000 sf
BASIC ALLOWABLE BLDG. HEIGHT (TABLE 3-H)	x 8 TIERS
TOTAL BASIC ALLOWABLE BUILDING AREA	240,000 sf
ALLOWABLE AREA INCREASE (SECT. 311.9.5)	x 1.25 (25%)
OVERALL TOTAL ALLOWABLE BUILDING AREA	300,000 sf

PROPOSED BUILDING AREA CALCULATION

TOTAL PROPOSED AREA - PARKING GARAGE	277,075 sf
AUXILIARY USE AREAS - 1st FLOOR	7348 sf
OVERALL TOTAL BUILDING AREA	284,423 sf
BUILDING HEIGHT:	8 TIERS (76'-1")

OCCUPANT LOAD CALCULATION

1 OCC./200 sf (TABLE 10.A)

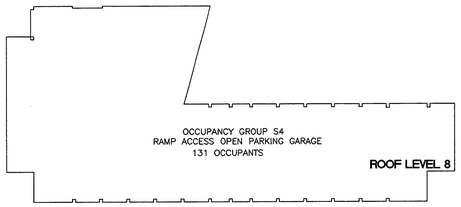

8th FLOOR AREA — 26,183 sf

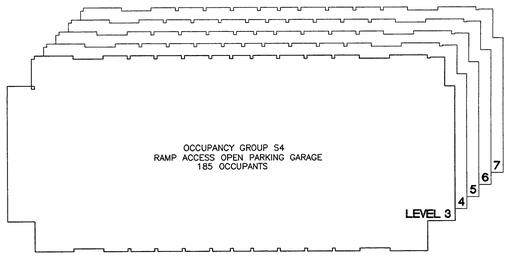

36,932 sf
36,932 sf
36,932 sf
36,932 sf
3rd - 7th FLOOR AREAS — 36,932 sf

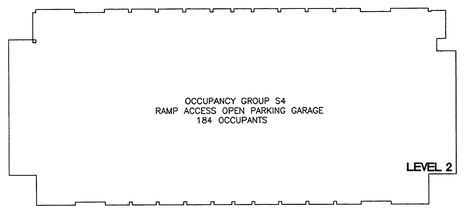

2nd FLOOR AREA — 36,832 sf

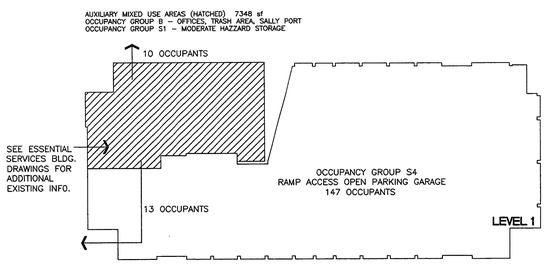

GROUND FLOOR AREA — 29,400 sf

TOTAL FLOOR AREA - OPEN PARKING GARAGE — 277,075 sf

A A0.01G **AREA CALCULATIONS AND DIAGRAMS** 1"=40'

SHEET INDEX

DWG. NO.	ARCHITECTURAL
A0.00G	COVER SHEET
A0.01G	CODE DIAGRAMS, CODE DATA AND SHEET INDEX
A0.02G	ABBREVIATIONS, SYMBOLS, AND MATERIALS LEGEND
A1.01G	SITE PLAN
A2.01G	GROUND LEVEL PARKING
A2.02G	SECOND LEVEL PARKING
A2.03G	THIRD LEVEL PARKING
A2.04G	FOURTH LEVEL PARKING AND DETAILS
A2.05G	FIFTH LEVEL PARKING AND DETAILS
A2.06G	SIXTH LEVEL PARKING AND DETAILS
A2.07G	SEVENTH LEVEL PARKING
A2.08G	EIGHTH LEVEL PARKING
A2.20G	DOOR SCHEDULE
A3.01G	PARKING GARAGE ELEVATIONS
A3.02G	PARKING GARAGE ELEVATIONS
A3.03G	PARKING GARAGE SECTIONS
A3.04G	PARKING GARAGE WALL SECTIONS
A3.05G	PARKING GARAGE PARTIAL ELEVATIONS AND WINDOW TYPES
A7.01G	STAIR SECTIONS AND DETAILS
A7.02G	ELEVATOR SECTIONS AND DETAILS
A8.01G	EXTERIOR DETAILS
A8.02G	EXTERIOR DETAILS

DWG. NO.	STRUCTURAL
S1.01G	GENERAL NOTES
S1.02G	TYPICAL DETAILS
S1.03G	TYPICAL DETAILS
S2.01G	FOUNDATION AND GROUND LEVEL SLAB PLAN (WEST)
S2.02G	FOUNDATION AND GROUND LEVEL SLAB PLAN (EAST)
S2.03G	2nd FLOOR FRAMING PLAN (WEST)
S2.04G	2nd FLOOR FRAMING PLAN (EAST)
S2.05G	3rd THRU 6th FLOOR FRAMING PLAN (WEST)
S2.06G	3rd THRU 6th FLOOR FRAMING PLAN (EAST)
S2.07G	7th FLOOR FRAMING PLAN (WEST)
S2.08G	7th FLOOR FRAMING PLAN (EAST)
S2.09G	8th FLOOR FRAMING PLAN (WEST)
S2.10G	8th FLOOR FRAMING PLAN (EAST)
S3.01G	PILE AND PILECAP DETAILS
S3.02G	COLUMN SCHEDULE AND PILECAPS
S3.03G	WALL ELEVATION
S3.04G	WALL ELEVATION
S4.01G	GARAGE SECTIONS
S4.02G	SECTIONS
S4.03G	SECTIONS
S4.04G	SECTIONS
S4.05G	SECTIONS
S5.01G	SLAB POST-TENSIONING TYPICAL DETAILS
S5.02G	TWO-WAY SLAB POST-TENSIONING TYPICAL DETAILS
S5.03G	BEAM POST-TENSIONING TYPICAL DETAILS
S5.04G	BEAM ELEVATIONS
S5.05G	BEAM ELEVATIONS
S6.01G	STEEL DETAILS
S6.02G	STEEL DETAILS
S7.01G	PRECAST PANEL DETAILS AND ELEVATIONS

DWG. NO.	MECHANICAL
M0.1G	EQUIPMENT SCHEDULE AND LEGEND
M2.01G	GROUND LEVEL PARKING HVAC DESIGN
M2.02G	SECOND LEVEL PARKING HVAC DESIGN

DWG. NO.	PLUMBING
P0-1G	FIXTURE AND EQUIPMENT SCHEDULE
P2.01G	GROUND LEVEL PARKING PLUMBING PLAN
P2.02G	SECOND LEVEL PARKING PLUMBING PLAN
P2.03G	TYPICAL LEVEL PARKING PLUMBING PLAN
P2.04G	SEVENTH LEVEL PARKING PLUMBING PLAN
P2.05G	EIGHTH LEVEL PARKING PLUMBING PLAN

DWG. NO.	ELECTRICAL
EU0.01G	GROUND LEVEL PARKING ELECTRICAL PLAN: MAJOR UNDERGROUND CONDUIT SYSTEM
E1.01G	ELECTRICAL PANEL SCHEDULES AND DETAILS
E2.01G	GROUND LEVEL PARKING LIGHTING PLAN
E2.02G	SECOND LEVEL PARKING ELECTRICAL PLAN
E2.03G	THIRD LEVEL PARKING ELECTRICAL PLAN
E2.04G	FOURTH LEVEL PARKING ELECTRICAL PLAN
E2.05G	FIFTH LEVEL PARKING ELECTRICAL PLAN
E2.06G	SIXTH LEVEL PARKING ELECTRICAL PLAN
E2.07G	SEVENTH LEVEL PARKING ELECTRICAL PLAN
E2.08G	EIGHTH LEVEL PARKING ELECTRICAL PLAN
E3.01G	GROUND LEVEL PARKING POWER AND SIGNAL SYSTEMS PLAN
E4.01G	SCHEDULES, LEGEND, NOTES, AND DETAILS

DWG. NO.	FIRE PROTECTION
F2.01G	GROUND LEVEL PARKING PLAN
F2.02G	SECOND LEVEL PARKING PLAN
F2.03G	3RD, 4TH, 5TH & 6TH LEVEL PARKING PLAN
F2.04G	SEVENTH LEVEL PARKING PLAN
F2.05G	EIGHTH LEVEL PARKING PLAN
F2.06G	DETAIL SHEET

PARKING SUMMARY

	PARKING GARAGE
STANDARD STALLS	487
COMPACT STALLS	320
STD. HDCP. STALLS	8
VAN ACC. HDCP. STALLS	10
TOTAL STALLS:	825

PLANS REVIEWED BY
Precision Inspection Company
Inspection and Consulting Services
Page 2 of 19

ENGLISH HARPER RETA
ARCHITECTS

580 UNIVERSITY AVENUE SUITE 100
SACRAMENTO, CA 95825 (916) 568-1821

THIS DRAWING IS NOT FINAL OR TO BE USED FOR CONSTRUCTION UNTIL IT IS SIGNED BY THE ARCHITECT AND THE OWNER.

ARCHITECT
EDWARD P. ENGLISH C-10399
RICHARD L. HARPER C-13830
RONALD A. RETA C- 9879

OWNER

CONTRACTOR

LICENSED ARCHITECT EDWARD P. ENGLISH No. C-10399 EXPIRATION DATE 3-31-01 STATE OF CALIFORNIA

Turner Construction Company

OFFICE COPY

Essential Services Facility
(UNDER SEPARATE DOCUMENT PACKAGE)
Parking Garage

KEY PLAN

DATE	NO.	DESCRIPTION
1-13-2000	3	OVERALL PERMIT SET
11-15-99	2	OVERALL PLAN CHECK SET
10-18-99	1	PROGRESS SET

REVISIONS

DRAWN BY
JMM

CHECKED BY
BH

Parking Garage
15 North El Dorado Street, Stockton, California
PROGRESS PRINT

DRAWING
CODE DIAGRAMS
CODE DATA AND
SHEET INDEX

PROJECT NO. 98113
DRAWING NO. A0.01G
CADFILE A0_01G.DWG
DATE 7 SEPTEMBER 1999

COMPLIANCE WITH CODES AND AUTHORITIES

1. ALL WORK SHALL COMPLY WITH THE MINIMUM STANDARDS OF THE UNIFORM BUILDING CODE (U.B.C.) 1997 EDITION.

2. ALL WORK SHALL COMPLY WITH THE LATEST EDITIONS AND SUPPLEMENTS OF THE FOLLOWING STATE REGULATIONS, CODES AND AUTHORITIES.

   A) CALIFORNIA STATE BUILDING CODE – TITLE 8.
   CALIFORNIA ADMINISTRATIVE CODE
   INDUSTRIAL RELATIONS
   CONSTRUCTION SAFTY ORDERS

   B) CALIFORNIA STATE BUILDING CODE – TITLE 24, PART 2
   CALIFORNIA ADMINISTRATIVE CODE
   BARRIER FREE ACCESS OF THE PHYSICALLY HANDICAPPED

   C) CALIFORNIA STATE BUILDING CODE – TITLE 24
   CALIFORNIA ADMINISTRATIVE CODE
   ENERGY REGULATIONS

3. ALL WORK SHALL COMPLY WITH THE LATEST EDITIONS OF THE FOLLOWING REGULATIONS, CODES AND AUTHORITIES:

   A) BUILDING INSPECTION DIVISION
   B) PLANNING AND DEVELOPMENT
   C) PUBLIC WORKS DEPARTMENT
   D) FIRE DEPARTMENT
   E) AMERICANS WITH DISABILITIES ACT (ADA)

4. ALL WORK SHALL COMPLY WITH LATEST EDITIONS OF THE MECHANICAL AND ELECTRICAL REGULATIONS, CODES AND AUTHORITIES.

   A) NATIONAL ELECTRIC CODE (N.E.C.)
   B) UNIFORM MECHANICAL CODE (U.M.C.)
   C) UNIFORM PLUMBING CODE (U.P.C.)
   D) UNIFORM FIRE CODE (U.F.C.)

5. ALL INTERIOR FINISH MATERIALS SHALL HAVE A FLAME SPREAD CLASSIFICATION RATING PER CHAPTER 8, U.B.C.

6. THE BUILDING SHALL BE PROVIDED WITH STANDARD AUTOMATIC FIRE EXTINGUISHING SYSTEM THROUGHOUT INCLUDING ABOVE ALL CEILINGS AND CONFORMING TO THE UNIFORM BUILDING CODE.

7. WHEN SERVING MORE THAN 100 SPRINKLERS, AUTOMATIC SPRINKLER SYSTEMS SHALL BE SUPERVISED BY AN APPROVED CENTRAL, PROPRIETARY OR REMOTE STATION SERVICE OR A LOCAL ALARM WHICH WILL GIVE AN AUDIBLE SIGNAL AT A CONSTANT ATTENDED LOCATION.

8. PROVIDE FIRE EXTINGUISHERS AS REQUIRED BY FIRE DEPARTMENT FIELD INSPECTOR.

9. ROOF COVERING AND ROOFING MATERIALS SHALL BE FIRE RETARDANT AND SHALL COMPLY WITH THE UNDERWRITERS LABORATORIES, INC. AND CLASSIFIED AS "A" U.L. FIRE HAZARD.

10. PROVIDE AND INSTALL U.L. APPROVED FIRESTOPPING & WRAPS AT ALL PENETRATIONS PER CHAPTER 7 OF THE UNIFORM BUILDING CODE AND THE UNIFORM FIRE CODE.

11. FIRE RATED PARTITION WALLS AND FIRE RATED OCCUPANCY SEPARATION WALLS SHALL EXTEND FROM CONCRETE FLOOR SLAB TO UNDERSIDE OF FLOOR DECK OR SLAB ABOVE. ALL OPENINGS SHALL BE PROTECTED AS FOLLOWS:

    A) ONE HOUR RATED WALLS – LABELED CLASS "C" FIRE DOOR, AND FRAME ASSEMBLY AND HARDWARE.

    B) TWO HOUR RATED WALLS – LABELED CLASS "B" FIRE DOOR, AND FRAME ASSEMBLY AND HARDWARE.

    B) THREE HOUR RATED WALLS – LABELED CLASS "A" FIRE DOOR, AND FRAME ASSEMBLY AND HARDWARE.

12. ALL LEGAL EXITS SHALL BE OPENABLE FROM THE INSIDE WITHOUT THE USE OF KEY, SPECIAL EFFORT OR KNOWLEDGE

13. EXIT SIGNS SHALL BE INSTALLED AT REQUIRED EXIT DOORWAYS AND WHERE OTHERWISE NECESSARY TO CLEARLY INDICATE THE DIRECTION OF EGRESS WHEN THE EXIT SERVES AND OCCUPANT LOAD OF 50 OR MORE

14. EXIT DOORS SHALL SWING IN THE DIRECTION OF EXIT TRAVEL WHEN SERVING MORE THAN 50 PERSONS.

15. PANIC HARDWARE SHALL BE PROVIDED ON EXIT DOORS SERVING ROOMS, CORRIDOR OR STAIRWAYS HANDLING AN OCCUPANT CAPACITY OF 100 OR MORE PERSONS.

16. DOOR OPENINGS IN ONE HOUR CORRIDORS SHALL BE PROTECTED BY A TIGHT–FITTING SMOKE–AND DRAFT–CONTROL ASSEMBLY HAVING A 20 MINUTE LABELED RATING. DOORS SHALL BE SELF CLOSING OR AUTOMATIC CLOSING BY ACTUATION OF A SMOKE DETECTOR. DOOR ASSEMBLY SHALL BE PROVIDED WITH A RATED LABELED GASKET SO INSTALLED AS TO PROVIDE A SEAL WHERE THE DOOR MEETS THE STOP ON BOTH SIDES AND ACROSS THE TOP

17. TOILET STALL DOOR OPENINGS SHALL BE (MIN.) 32" CLEAR WIDE FOR END DOORS, AND (MIN.) 34" CLEAR WIDE FOR SIDE DOORS.

18. CONCRETE CONSTRUCTION SHALL COMPLY WITH CHAPTER 19, UNIFORM BUILDING CODE.

19. STEEL CONSTRUCTION SHALL COMPLY WITH CHAPTER 22, UNIFORM BUILDING CODE.

CONTRACTOR RESPONSIBILITIES

1. THE CONTRACTOR SHALL EXAMINE THE DRAWINGS AND SPECIFICATIONS AND SHALL NOTIFY THE ARCHITECT OF ANY DISCREPANCIES HE MAY FIND BEFORE PROCEEDING WITH THE WORK.

2. THE CONTRACTOR SHALL VERIFY CONDITIONS AT THE SITE AND REPORT ANY DISCREPANCIES TO THE ARCHITECT BEFORE PROCEEDING WITH THE WORK.

3. THE CONTRACTOR SHALL NOTIFY UNDERGROUND SERVICE ALERT PRIOR TO ANY EXCAVATING.

4. THE CONTRACTOR SHALL VERIFY THE LOCATION OF ALL EXISTING UTILITIES BELOW GRADE AND RELATED SERVICE CONNECTIONS WITH THE RESPECTIVE UTILITY COMPANY.

5. THE CONTRACTOR SHALL COORDINATE THE REMOVAL, ABANDONMENT AND/OR RELOCATION OF EXISTING UTILITIES ABOVE OR BELOW GRADE WITH THE RESPECTIVE UTILITY COMPANY.

6. THE CONTRACTOR SHALL PROVIDE TEMPORARY BRACES, SHORES AND GUYS REQUIRED TO SUPPORT ALL LOADS TO WHICH THE BUILDING STRUCTURES AND COMPONENTS, ADJACENT SOILS AND STRUCTURES, UTILITIES AND RIGHT–OF–WAYS MAY BE SUBJECT DURING CONSTRUCTION.

7. FLOOR AND WALL OPENINGS, SLEEVES, VARIATIONS IN THE STRUCTURAL SLAB ELEVATIONS, DEPRESSED AREAS, AND ALL OTHER ARCHITECTURAL, MECHANICAL, ELECTRICAL AND/OR CIVIL REQUIREMENTS MUST BE COORDINATED BEFORE THE CONTRACTOR PROCEEDS WITH CONSTRUCTION.

8. PROPERTY CORNERS AND PROPERTY LINE CHANGES OF DIRECTION SHALL BE IDENTIFIED BY PROPERTY SURVEY MONUMENTS AT THE TIME OF FORM INSPECTION. THESE PROPERTY MONUMENTS ARE TO BE RE–INSPECTED AT THE TIME OF FINAL BUILDING INSPECTION.

CONSTRUCTION DOCUMENTS

1. ALL DRAWINGS, ISSUED SEPARATELY AS CONSTRUCTION PACKAGES INCLUDING ALL DETAILS, SPECIFICATIONS AND DRAWINGS BOUND SEPARATELY, ARE A PART OF THE CONTRACT.

2. ITEMS MARKED "N.I.C." ARE NOT IN CONTRACT. SUCH ITEMS ARE INCLUDED IN THE DOCUMENTS WHEN CONTRACTORS COORDINATION FOR CONSTRUCTION IS REQUIRED.

3. DIMENSIONS:

   A) IN NO CASE SHALL WORKING DIMENSIONS BE SCALED FROM PLANS, SECTIONS, OR DETAILS ON DRAWINGS.

   B) ALL DIMENSIONS TO OPENINGS ARE TO THE FINISHED FACE UNLESS NOTED OTHERWISE.

   C) ALL DIMENSIONS TO STUD PARTITIONS ARE TO THE FACE OF FINISH UNLESS NOTED OTHERWISE (U.N.O.)

   D) CEILING HEIGHT DIMENSIONS ARE FROM FINISH FLOOR TO FINISH FACE OF CEILING.

   E) ALL DIMENSIONS SHALL BE VERIFIED IN THE FIELD BEFORE PROCEEDING WITH THE WORK.

4. DETAILS MARKED "TYPICAL" SHALL APPLY IN ALL CASES UNLESS SPECIFICALLY INDICATED OTHERWISE.

5. WHERE NO SPECIFIC DETAIL IS SHOWN, THE FRAMING OR CONSTRUCTION SHALL BE IDENTICAL OR SIMILAR TO THAT INDICATED FOR LIKE CASES OF CONSTRUCTION ON THE PROJECT.

6. DOOR SIZES INDICATED ON DOOR SCHEDULE ARE OPENING DIMENSIONS. ALLOWANCES FOR THRESHOLDS, ETC. SHALL BE TAKEN OFF DOOR.

7. THE PRECISE DIMENSIONS AND LOCATIONS OF ALL DOOR LOUVERS AND WINDOW OPENINGS SHALL BE DETERMINED FROM ARCHITECTURAL PLANS AND DETAILS. OTHER WALL AND FLOOR OPENINGS AS REQUIRED BY MECHANICAL, ELECTRICAL OR SIMILAR REQUIREMENTS SHALL BE VERIFIED FROM SHOP DRAWINGS, EQUIPMENT DATA, ETC. AS REQUIRED.

8. DOOR OPENINGS NOT LOCATED BY DIMENSIONS SHALL BE CENTERED IN WALLS AS SHOWN OR LOCATED 5" FROM FINISH WALL TO FINISH JAMB UNLESS OTHERWISE NOTED OR REQUIRED.

9. SEE ARCHITECTURAL REFLECTED CEILING PLANS FOR DIMENSIONS LOCATING LIGHT FIXTURES, DIFFUSERS AND SPEAKERS. ARCHITECTURAL REFLECTED CEILING PLANS DO NOT INDICATE WALL MOUNTED FIXTURES. REFER TO ELECTRICAL DRAWINGS FOR ALL LIGHTING FIXTURES – RECESSED, SURFACE OR WALL MOUNTED.

10. CEILING SUSPENSION SYSTEM SHALL PROVIDE FOR CEILING SYSTEM ONLY. ADDITIONAL INDEPENDENT FRAMING FOR LIGHTING FIXTURES, EXIT SIGNS, GRILLES, AIRBARS AND AIR CONDITIONING DIFFUSERS SHALL BE REQUIRED. ATTACHMENT OF HANGERS OR FRAMING TO DUCTWORK IS PROHIBITED.

11. WHERE LARGER STUDS OR FURRING ARE REQUIRED TO COVER DUCTS, PIPING, CONDUITS, ETC., THE LARGER STUD SIZE OR FURRING TO EXTEND FULL WIDTH OF WALL SURFACE WHERE FURRING OCCURS, UNLESS OTHERWISE INDICATED.

12. PROVIDE ADEQUATE ANCHORAGE, BLOCKING, BACKING, AND FRAMING FOR FIRE SPRINKLERS, PIPING, LIGHT FIXTURES, ELECTRICAL UNITS, HVAC EQUIPMENT, DRAPERY AND CEILING TRACKS AS REQUIRED FOR A COMPLETE INSTALLATION.

13. ALL CABINETS RECESSED INTO RATED WALLS SHALL BE BACKED WITH ONE HOUR OR TWO HOUR FIRE RESISTIVE CONSTRUCTION AS REQUIRED. ELECTRICAL PANELS AND/OR WIRING SYSTEMS SHALL NOT BE LOCATED IN CORRIDOR OR SHAFT WALLS.

14. ALL STEEL STUD SIZES AND SPACING IN GYPSUM BOARD WALLS SHALL BE IN ACCORDANCE WITH UNDERWRITERS LABORATORIES, INC. FOR RATED ASSEMBLIES. SUBMIT DATA FOR APPROVAL.

15. ALL SINGLE LAYER GYPSUM BOARD WALLS CONTINUOUS AND CONTIGUOUS WITH DOUBLE LAYER GYPSUM BOARD SHALL MAINTAIN ONE CONTINUOUS OUTER LAYER OF GYPSUM BOARD AT THE SAME FACE OF FINISH. METAL STUDS AND FURRING CHANNELS SHALL BE OFFSET ACCORDINGLY.

16. WALL AND COLUMN GYPSUM BOARD FACING ON OTHER THAN FIRE AND SOUND RATED WALLS SHALL EXTEND 6" MINIMUM ABOVE CEILING HEIGHT.

17. GYPSUM BOARD ON INTERIOR METAL STUDS SHALL BE 5/8" THICK UNLESS NOTED OTHERWISE.

18. REFER TO SPECIFICATIONS AND FINISH SCHEDULE FOR TYPES OF PAINT FINISHES, METAL FINISHES, CONCRETE FINISHES, WEATHER AND SOUND SEALANTS, DOOR FRAME ANCHORS AND ACOUSTICAL TILE CEILING SYSTEMS.

19. PROVIDE 48" CLEARANCE IN TOILET COMPARTMENT FROM FRONT OF WATER CLOSET TO INSIDE FACE OF DOOR.

20. MAINTAIN 36" MINIMUM UNOBSTRUCTED WORKING SPACE IN FRONT OF ALL PANEL BOARDS AND CONTROL EQUIPMENT.

21. POUR JOINTS IN CONCRETE SLABS SHALL BE AS SHOWN ON STRUCTURAL DRAWINGS.

22. CONCRETE HOUSKEEPING PADS (4" HIGH) SHALL BE PROVIDED FOR MECHANICAL, PLUMBING AND ELECTRICAL EQUIPMENT UNLESS OTHERWISE DETAILED OR SPECIFIED.

23. SIZE OF MECHANICAL AND ELECTRICAL EQUIPMENT PADS AND BASES ARE APPROXIMATE ONLY. THE CONTRACTOR SHALL VERIFY DIMENSIONS WITH EQUIPMENT MANUFACTURER.

MECHANICAL AND PLUMBING

1. MECHANICAL AND PLUMBING SHALL COMPLY WITH THE UNIFORM MECHANICAL AND PLUMBING CODES.

2. FIRE DAMPERS SHALL BE PROVIDED FOR ALL DUCTS AND OPENINGS WHICH PENETRATE FIRE RATED WALLS OR FIRE RATED CEILINGS.

3. TOILET ROOMS SHALL BE EQUIPPED WITH VENTILATION SYSTEM PROVIDING A MINIMUM OF ONE COMPLETE AIR CHANGE FOR EACH 5 MINUTES.

4. CEILING ACCESS PANELS SHALL BE PROVIDED BY THE MECHANICAL, FIRE SPRINKLER AND PLUMBING CONTRACTORS AND LOCATED BELOW ALL VALVES, DUCTWORK, FIRE DAMPERS, ETC., AND AS REQUIRED OR AS DIRECTED BY THE ARCHITECT.

5. LOCATION OF ALL MECHANICAL ROOF OPENINGS SHALL BE DETERMINED OR VERIFIED BY THE MECHANICAL CONTRACTOR.

6. AN OUTSIDE LABELED GAS SHUT–OFF VALVE(S) SHALL BE PROVIDED AS REQUIRED.

7. FIRE SPRINKLERS SHALL BE REVIEWED AND APPROVED BY THE FIRE MARSHALL PRIOR TO INSTALLATION.

8. PIPE SLEEVES IN MECHANICAL EQUIPMENT ROOMS SHALL EXTEND 2" ABOVE THE FLOOR LINE. ELECTROLYSIS PROTECTION SHALL BE PROVIDED BETWEEN ALL DISSIMILAR METALS WHEREVER THE TWO ARE IN CONTACT.

9. ALL CONTINUOUSLY CIRCULATING DOMESTIC HEATING, HOT WATER AND CHILLED WATER PIPING SHALL BE INSULATED AS REQUIRED.

10. HORIZONTAL TRANSITIONS OCCURING IN DUCT SHAFTS SHALL BE CONSTRUCTED PER REQUIREMENTS OF THE UNIFORM BUILDING CODE FOR REQUIRED FIRE RESISTANCE AND BE SUPPORTED OR SUSPENDED AS NECESSARY.

SECURITY BUILDING STANDARDS

1. ALL WORK SHALL COMPLY WITH THE FOLLOWING SECURITY BUILDING STANDARDS:

   A) GENERAL REQUIREMENTS – ALL BUILDINGS
   1) SECURITY AND LOCKING DEVICES SHALL NOT CREATE HAZARDS TO LIFE BY OBSTRUCTING:

      A) EXITWAYS OR MEANS OF EGRESS

      B) EXIT DOORS EQUIPPED WITH "PANIC" HARDWARE

2. ASSEMBLIES AND SECURITY HARDWARE INSTALLED SHALL BE LABELED AND CERTIFIED AS MEETING UBC STANDARDS 7–2 & 10–4, OR OTHER APPROVED PERFORMANCE TESTING CRITERIA.

3. REQUIRED AREA LIGHTING AND ADDRESS IDENTIFICATION SHALL BE INSTALLED BEFORE FINAL INSPECTION IS CALLED FOR.

4) ILLUMINATION PER CODE REQUIREMENTS SHALL BE PROVIDED ON ALL EXTERIOR DOORS DURING ALL HOURS OF DARKNESS.

   B) EXTERIOR DOOR PROVISIONS:

   1) HINGES FOR OUT – SWINGING DOORS SHALL HAVE NONREMOVEABLE EXTERIOR HINGE PINS.

   2) DOUBLE DOORS WITH PANIC HARDWARE SHALL HAVE TWO LOCKING POINTS OR BE EQUIPPED WITH .125" THICK 2" WIDE ASTRAGAL AND A COORDINATING CLOSER MECHANISM.

   C) WINDOW PROVISIONS:

   1) GLAZING IN EXTERIOR DOORS OR WITHIN 40" OF ANY LOCKING MECHANISM SHALL BE TEMPERED OR BURGLARY RESISTANT

   2) GLAZING AND GLAZED ASSEMBLIES FOR "ACCESSIBLE" OPENINGS SHALL BE CERTIFIED AS MEETING TEST PROVISIONS OF U.B.C. STANDARD 24–1.

TYPICAL NOTES

1. "SIMILAR" MEANS COMPARABLE CHARACTERISTICS FOR THE CONDITIONS NOTED. VERIFY DIMENSIONS AND/OR ORIENTATIONS ON PLAN AND/OR ELEVATIONS.

2. DIMENSIONS ARE NOT ADJUSTABLE WITHOUT APPROVAL OF ARCHITECT IN WRITING.

3. IT SHALL BE THE RESPONSIBILTY OF THE CONTRACTOR TO NOTIFY THE ARCHITECT OF ANY CONFLICTS HEREIN – EITHER APPARENT OR OBVIOUS – PRIOR TO START OF WORK ON THAT ITEM OR BEAR THE RESPONSIBILITY OF CORRECTING SUCH WORK AS DIRECTED BY THE ARCHITECT.

4. UNDERCUT ALL DOORS TO CLEAR TOP OF CARPET 1/4" MAXIMUM.

5. PREPARE DOORS FOR HARDWARE SPECIFIED. TEST AND ADJUST DOORS FOR SMOOTH, QUIET OPERATION, BEFORE FINAL INSPECTION.

6. USE WATER RESISTANT GYPSUM WALLBOARD ON ALL WALL FACES WHICH ARE EXPOSED TO WATER OR MOISTURE AS WELL AS THOSE USED FOR JANITOR AND TOILET ROOM WALLS.

7. WHERE SOUND INSULATION IS SHOWN FOR INTERIOR WALLS, USE MIN. 3" THICK MINERAL FIBER OR R–11 FIBERGLAS, FRICTION FIT, UNLESS NOTED OTHERWISE.

8. ALL EXTERIOR WALLS SHALL BE INSULATED AS REQUIRED BY "TITLE 24". SEE DRAWINGS FOR DETAILS.

9. BLOCK–OUT AND/OR DEPRESS FLOOR SLABS AS REQUIRED FOR FLOOR CLOSERS AND FLOOR DRAINS.

10. PROVIDE ADEQUATE BLOCKING AND ANCHORAGE FOR CEILING AND WALL MOUNTED EQUIPMENT (E.G. WATER COOLERS, FIRE EXTINGUISHER CABINETS, HANDRAILS & GUARDRAILS, ETC.) SEE TYP. DETAILS

11. ALL ELEVATIONS ARE REFERENCED FROM THE TOP OF THE GROUND FLOOR CONCRETE SLAB BEING EQUAL TO +0'–0". ADJUST FOR ACTUAL CONDITIONS.

12. GROUND FLOOR RESTROOM FLOORS SLOPE TO DRAINS.

13. ALL CEILING CONSTRUCTION SHALL COMPLY WITH CHAPTER 25, OF THE UNIFORM BUILDING CODE.

ABBREVIATIONS

A	A.B.	ANCHOR BOLT
	ACOUST.	ACOUSTICAL
	A.D.	AREA DRAIN
	ADJ.	ADJUSTABLE
	ALUM.	ALUMINUM
	ALT.	ALTERNATE
	APPROX.	APPROXIMATE
	ARCH.	ARCHITECT(URAL)
	ASPH.	ASPHALT
B	BITUM.	BITUMINOUS
	BLDG.	BUILDING
	BLK.	BLOCK
	BLKG.	BLOCKING
	BM.	BEAM
	BOT.	BOTTOM
	BD.	BOARD
	B.U.R.	BUILT–UP ROOF
C	CAB.	CABINET
	C.B.	CATCH BASIN
	CEM.	CEMENT
	CER.	CERAMIC
	C.TILE	CERAMIC TILE
	C.I.	CAST IRON
	C.J.	CONSTRUCTION (CONTROL) JOINT
	CLG.	CEILING
	CLR	CLEAR
	COL.	COLUMN
	CONC.	CONCRETE
	CONN.	CONNECTION
	CONSTR.	CONSTRUCTION
	CONT.	CONTINUOUS
	CORR.	CORRIDOR
	CTSK.	COUNTERSUNK
	CNTR.	COUNTER
	CTR.	CENTER
D	DBL.	DOUBLE
	DEPT.	DEPARTMENT
	D.F.	DRINKING FOUNTAIN
	DET.	DETAIL
	DIA	DIAMETER
	DIAG.	DIAGONAL
	DIM.	DIMENSION
	DISP.	DISPENSER
	DN.	DOWN
	D.P.	DIMENSION POINT
	DWR.	DRAWER
	DS.	DOWNSPOUT
	D.S.P.	DRY STANDPIPE
	DRWG.	DRAWING
E	EA.	EACH
	E.J.	EXPANSION JOINT
	EL.	ELEVATION
	ELEC.	ELECTRICAL
	ELEV.	ELEVATOR
	ENCL.	ENCLOSURE
	ELEC.PNL.	ELECTRICAL PANEL
	E.O.S.	EDGE OF SLAB
	EQ.	EQUAL
	EQUIP.	EQUIPMENT
	E.W.C.	ELECTRICAL WATER COOLER
	EXIST. (E)	EXISTING
	EXP.	EXPANSION
	EXT.	EXTERIOR
F	F.A.	FIRE ALARM
	F.D.	FLOOR DRAIN
	FDN.	FOUNDATION
	F.E.	FIRE EXTINGUISHER
	F.E.C.	FIRE EXTINGUISHER CAB.
	F.F.	FINISH FLOOR
	F.H.C.	FIRE HOSE CABINET
	F.H.W.S.	FLAT HEAD WOOD SCREW
	FIN.	FINISH
	FLASH.	FLASHING
	FLR.	FLOOR
	FLUOR.	FLUORESCENT
	F.O.C.	FACE OF CONCRETE
	F.O.F.	FACE OF FINISH
	F.O.S.	FACE OF STUD
	F.O.W.	FACE OF WALL
	FR.	FRAME
	F.T.	FIRE–RETARDANT TREATED
	FT.	FOOT OR FEET
	FTG.	FOOTING
	FURR.	FURRING
G	GA.	GAUGE
	GALV.	GALVINIZED
	G.I.	GALVINIZED IRON
	GL.	GLASS
	GND.	GROUND
	GYP.	GYPSUM
	GYP. BD.	GYPSUM BOARD
H	H.B.	HOSE BIBB
	H.C.	HOLLOW CORE
	HDWD.	HARDWOOD
	H.M.	HOLLOW METAL
	HORIZ.	HORIZONTAL
	HR.	HOUR
	HGT.	HEIGHT
I	I.D.	INSIDE DIAMETER (DIM.)
	INSUL.	INSULATION
	INT.	INTERIOR
J	JAN.	JANITOR
	JT.	JOINT
L	LAM.	LAMINATE
	LAV.	LAVATORY
	LBS.	POUNDS
	LVR.	LOUVER
M	MACH.	MACHINE
	MAT.	MATERIAL
	MAX.	MAXIMUM
	M.B.	MACHINE BOLT
	M.C.	MEDICINE CABINET
	MECH.	MECHANICAL
	MFR.	MANUFACTURER
	MIN.	MINIMUM
	MIR.	MIRROR
	MISC.	MISCELLANEOUS
	M.O.	MASONRY OPENING
	MTD.	MOUNTED
	MTL.	METAL
	MULL.	MULLION
N	(N)	NEW
	N.	NORTH
	N.I.C.	NOT IN CONTRACT
	NO. OR #	NUMBER
	NOM.	NOMINAL
	N.T.S.	NOT TO SCALE
O	O.C.	ON CENTER
	O.D.	OUTSIDE DIAMETER (DIM.)
	OFF.	OFFICE
	OPNG.	OPENING
	OPP.	OPPOSITE
P	PC.	PRECAST
	P.D.F.	POWDER DRIVEN FASTENER
	PERF.	PERFORATED
	PNL.	PANEL
	PL.	PLATE
	PLAS. LAM.	PLASTIC LAMINATE
	PLYWD.	PLYWOOD
	P.M.F.	PRESSED METAL FRAME
	PT.	POINT
	P.T.D.	PAPER TOWEL DISPENSER
	P.T.D/R	COMBINATION PAPER TOWEL DISPENSER & RECEPTACLE
	PART.	PARTITION
	P.T.R.	PAPER TOWEL RECEPTACLE
Q	Q.T.	QUARRY TILE
R	R.	RISER/RADIUS
	R.D.	ROOF DRAIN
	REF.	REFERENCE
	REFR.	REFRIGERATOR
	REINF.	REINFORCE(D), (ING)
	REQ'D.	REQUIRED
	REQ'MTS.	REQUIREMENTS
	RESIL.	RESILIENT
	R.O.	ROUGH OPENING
	RWD.	REDWOOD
	R.W.L.	RAIN WATER LEADER
S	S.C.	SOLID CORE
	S.C.D.	SEAT COVER DISPENSER
	SCHED.	SCHEDULE
	S.D.	SOAP DISPENSER
	SECT.	SECTION
	SH.	SHELF
	SHR.	SHOWER
	SHT.	SHEET
	SIM.	SIMILAR
	S.N.D.	SANITARY NAPKIN DISPENSER
	S.N.R.	SANITARY NAPKIN RECEPTACLE
	SPA.	SPACE
	SPEC.	SPECIFICATION
	SQ.	SQUARE
	ST. STL. OR SST	STAINLESS STEEL
	S.S.	SERVICE SINK
	STL.	STEEL
	STOR.	STORAGE
	STRUCT. OR STR.	STRUCTURAL
	SUSP.	SUSPEND(ED)
	SYM.	SYMMETRICAL
	SW. BD.	SWITCHBOARD
T	T.	TREAD
	T.D.	TRENCH DRAIN
	TEL.	TELEPHONE
	TEMP.	TEMPERED
	T. & G.	TONGUE AND GROOVE
	THK.	THICK(NESS)
	T.O.B.	TOP OF BEAM
	T.O.C.	TOP OF CURB
	T.O.S.	TOP OF STEEL
	T.O.P.	TOP OF PAVEMENT/PARAPET
	T.O.R.	TOP OF ROOF
	T.O.W.	TOP OF WALL
	T.P.D.	TOILET PAPER DISPENSER
	TRANS.	TRANSFORMER
	T.V.	TELEVISION
	TYP.	TYPICAL
U	U.N.O.	UNLESS NOTED OTHERWISE
	UR.	URINAL
	U/S	UNDERSIDE
V	V.C.T.	VINYL COMPOSITION TILE
	VERT.	VERTICAL
	VEST.	VESTIBULE
W	W/	WITH
	W.C.	WATER CLOSET
	WD.	WOOD
	WDW.	WINDOW
	W/O	WITHOUT
	W.P.	WATERPROOF
	WNSCT.	WAINSCOT
	WT.	WEIGHT
	W.W.F	WELDED WIRE FABRIC
	W/R	WATER RESISTANT
Y	YD.	YARD

SYMBOLS

&	AND
@	AT
℄	CENTERLINE
∅	DIAMETER OR ROUND
#	POUND OR NUMBER
☐	SQUARE FOOT (FEET)

A / 1 — COLUMN LINE
LETTERS IN ONE DIRECTION
NUMBERS IN THE OTHER DIRECTION

03 — GLASS TYPE
SEE SPECIFICATIONS

1 — WALL TYPE
SEE DWG A2.12

101 — DOOR SYMBOL
SEE DWG A2.20

W1 — WINDOW TYPE
SEE 21/A2.21

C — LOUVER OR FIXTURE TYPE
SKIP LETTERS "I" AND "O"

3 / 9.1 — EQUIPMENT OR CASEWORK TYPE
EQUIPMENT NUMBER
DRAWING WHERE DETAIL IS DRAWN

3 — REVISION
CLOUD AROUND REVISION
REVISION NUMBER

MATCH LINE
SHADED PORTION IS THE SIDE CONSIDERED

WORK POINT, CONTROL POINT OR DATUM POINT

SECTION
A5.01 — SECTION IDENTIFICATION
DRAWING WHERE DETAIL IS DRAWN

4 / A3.02 — DETAIL
DETAIL IDENTIFICATION
DRAWING WHERE DETAIL IS DRAWN

3 / 2 / 4 A3.02 / 1 — INTERIOR ELEVATION(S)
ELEVATION IDENTIFICATION (UNFOLD ELEVATIONS CLOCKWISE)
NO ARROWS MEANS ELEVATION NOT SHOWN
DRAWING WHERE DETAIL OCCURS

ROOM IDENTIFICATION
OFFICE / 102 — ROOM NAME
ROOM NO.

72.0 / 68.5 — NEW FINISH GRADE DRAWN @ 45°
EXISTING GRADE SHOWN HORIZONTALLY

PROPERTY LINE

78 — EXISTING CONTOURS

71 — NEW OR FINISHED CONTOURS

T.W. 15.0 — TOP OF WALL

T.C. 18.0 — TOP OF CURB

T.P. 15.4 — TOP OF PAVEMENT

ENVELOPE MANDATORY MEASURES

E1. INSTALLED INSULATING MATERIAL SHALL HAVE BEEN CERTIFIED BY THE MANUFACTURER TO COMPLY WITH THE CALIFORNIA QUALITY STANDARDS FOR INSULATING MATERIAL.

E2. ALL INSULATING MATERIALS SHALL BE INSTALLED IN COMPLIANCE WITH THE FLAME SPREAD RATING AND SMOKE DENSITY REQUIREMENTS OF SECTION 707 OF THE UBC.

E3. ALL EXTERIOR JOINTS AND OPENINGS IN THE BUILDING ENVELOPE THAT ARE OBSERVABLE SOURCES OF AIR LEAKAGE SHALL BE CAULKED, GASKETED, WEATHERSTRIPPED OR OTHERWISE SEALED.

E4. SITE CONSTRUCTED DOORS, WINDOWS AND SKYLIGHTS SHALL BE CAULKED BETWEEN THE UNIT AND THE BUILDING, AND SHALL BE WEATHERSTRIPPED (EXCEPT FOR UNFRAMED GLASS DOORS AND FIRE DOORS).

E5. MANUFACTURED DOORS AND WINDOWS SHALL HAVE AIR INFILTRATION RATES CERTIFIED BY THE MANUFACTURER PER 116 (a) (1) OF THE ENERGY EFFICIENCY STANDARDS.

E6. MANUFACTURED FENESTRATION PRODUCTS MUST BE LABELED FOR U–VALUE ACCORDING TO NFRC PROCEDURES.

E7. DEMISING WALL INSULATION (R–11) SHALL BE INSTALLED IN ALL OPAQUE PORTIONS OF FRAMED WALLS, (EXCEPT DOORS).

VICINITY MAP

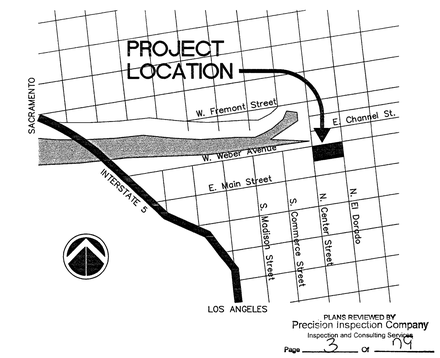

PLANS REVIEWED BY
Precision Inspection Company
Inspection and Consulting Services

Page 3 Of 19

ENGLISH HARPER RETA
ARCHITECTS

580 UNIVERSITY AVENUE SUITE 100
SACRAMENTO, CA 95825 (916) 568–1821

THIS DRAWING IS NOT FINAL OR TO BE USED FOR CONSTRUCTION UNTIL IT IS SIGNED BY THE ARCHITECT AND THE OWNER.

ARCHITECT
EDWARD P. ENGLISH C–10399
RICHARD L. HARPER C–13830
RONALD A. RETA C– 9879

OWNER

CONTRACTOR

Turner Construction Company

This set of plans and calculations MUST be kept on the job at all times and it is unlawful to make any changes or alterations on same, or any part thereof, without the written approval of the Building Official of the City of Stockton.

By _____

This approval of the plans and calculations shall not be held to permit or to be an approval of the violation of any provisions of the Ordinances of the City of Stockton or State Law. Approval of plans does not permit the violation of any section of the Ordinances of the City of Stockton or State Law.

Date _____

Fire approval

REVISED COPY

Essential Services Facility
(UNDER SEPARATE DOCUMENT PACKAGE)
Parking Garage

KEY PLAN

DATE	NO.	DESCRIPTION
1–13–2000	3	OVERALL PERMIT SET
11–15–99	2	OVERALL PLAN CHECK SET
10–18–99	1	PROGRESS SET

REVISIONS
DRAWN BY
CHECKED BY

Parking Garage
15 North El Dorado Street, Stockton, California
PROGRESS PRINT

DRAWING
ABBREVIATIONS, SYMBOLS, AND MATERIALS LEGEND

PROJECT NO. 98113
DRAWING NO. A0.02G
CADFILE A0.02G.DWG
DATE 7 SEPTEMBER 1999

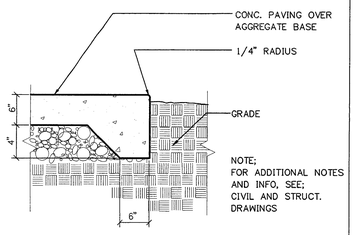

26 A1.01G CONC. APRON OR RAMP
1"= 1'-0"
ESF_8006

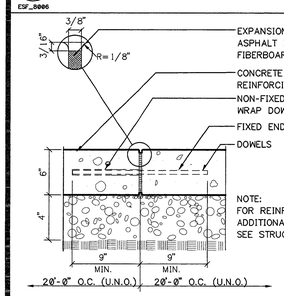

27 A1.01G EXPANSION JOINT
1"= 1'-0"
ESF_8018

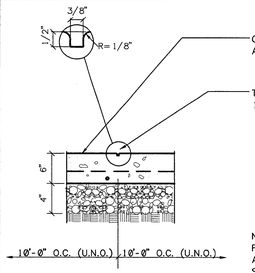

28 A1.01G CONTROL JOINT
1"= 1'-0"
ESF_8013

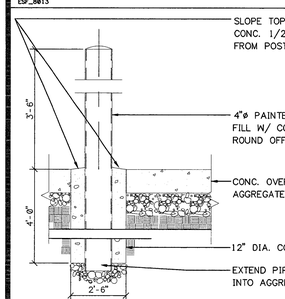

29 A1.01G BOLLARD
3/8"= 1'-0"
ESF_8004

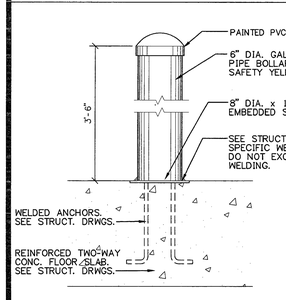

30 A1.01G BREAK AWAY BOLLARD
1 1/2"= 1'-0"
ESF_9039

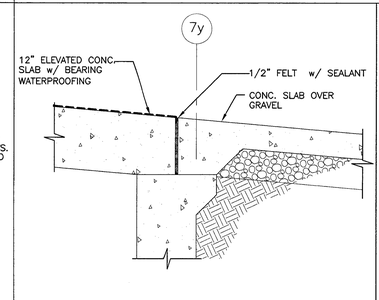

25 A1.01G SLAB WATERPROOFING
1"=1'-0"
ESF_8060

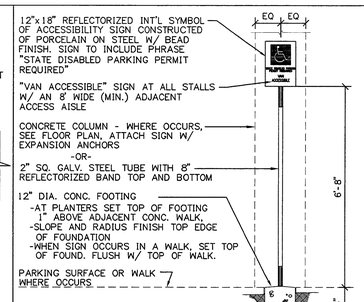

20 A1.01G ACCESSIBLE PKG. SIGN
1/2"= 1'-0"
ESF_8035

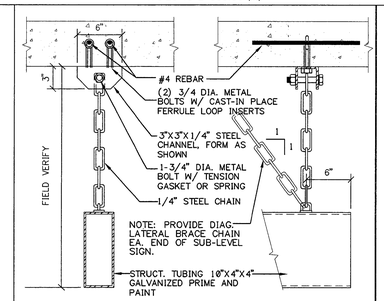

15 A1.01G SUSPENDED SIGN
1 1/2"= 1'-0"
ESF_8081

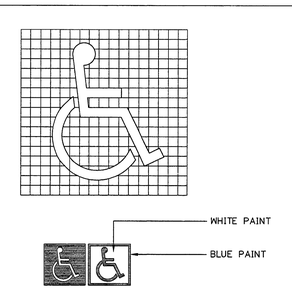

10 A1.01G INTERNATIONAL SYMBOL OF ACCESSIBILITY
1/2"= 1'-0"
ESF_132

NOTE
A SIGN SHALL BE POSTED, IN A CONSPICUOUS PLACE, AT EACH ENTRANCE TO THE PARKING FACILITY, NOT LESS THAN 17" X 22" IN SIZE WITH LETTERING NOT LESS THAN 1" IN HEIGHT, WHICH CLEARLY AND CONSPICUOUSLY STATES THE FOLLOWING:

"UNAUTHORIZED VEHICLES PARKED IN DESIGNATED ACCESSIBLE SPACES NOT DISPLAYING DISTINGUISHING PLACARDS OR LICENSE PLATES ISSUED FOR PERSONS WITH DISABILITIES MAY BE TOWED AWAY AT OWNER'S EXPENSE. TOWED VEHICLES MAY BE RECLAIMED AT _____ OR BY TELEPHONING _____."

THE BLANK SPACES INDICATED ARE TO BE FILLED IN WITH THE APPROPRIATE INFORMATION AS A PERMANENT PART OF THE SIGN

THE SIGN SHALL BE REFLECTORIZED. CONSTRUCTED OF PORCELAIN ON STEEL WITH BEADED TEXT, OR EQUAL.

5 A1.01G ACCESSIBLE PARKING SIGN
N.T.S.
ESF_129

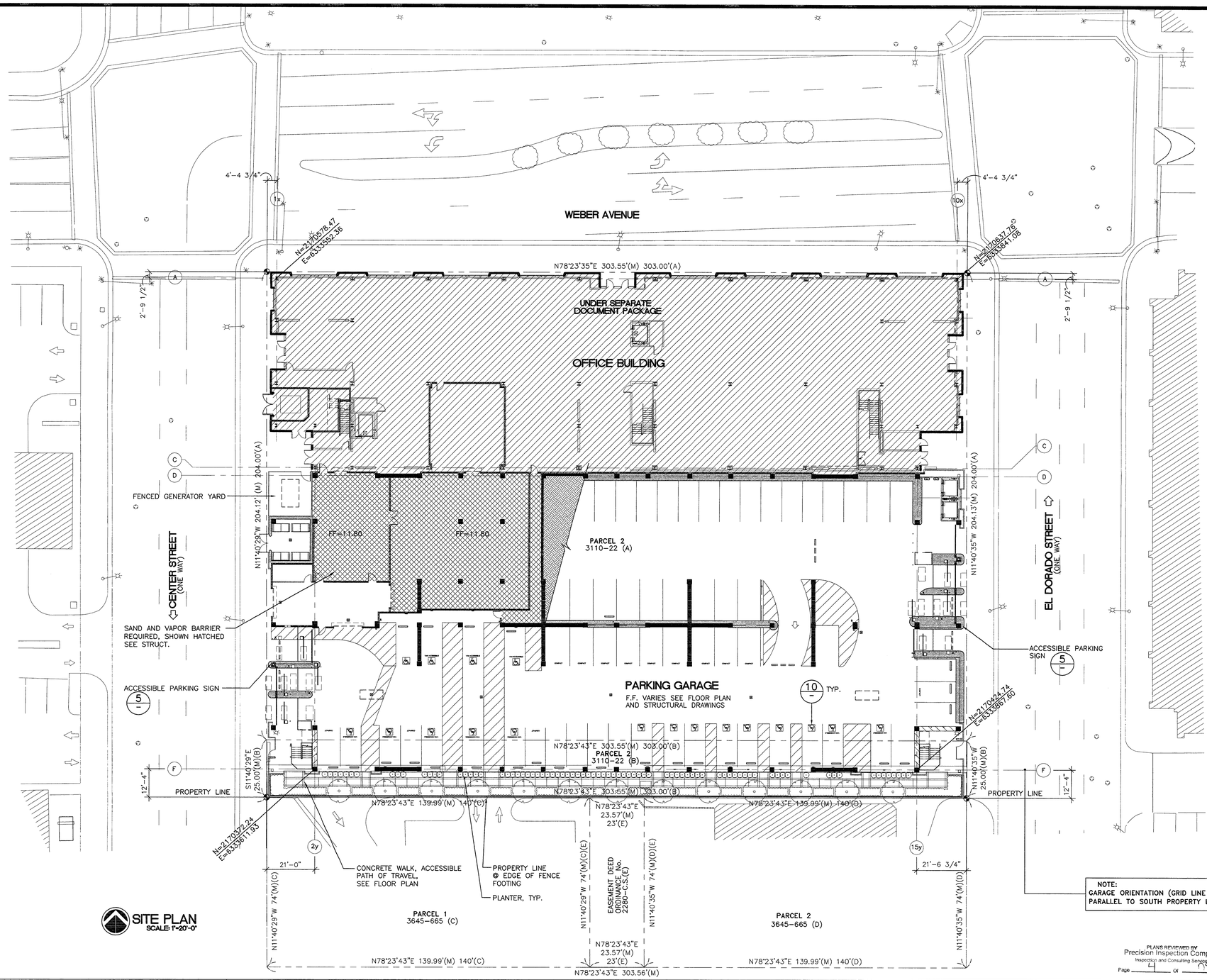

SITE PLAN
SCALE: 1"=20'-0"

PLANS REVIEWED BY
Precision Inspection Company
Inspection and Consulting Services
Page ___ of ___

ENGLISH HARPER RETA
ARCHITECTS

580 UNIVERSITY AVENUE SUITE 100
SACRAMENTO, CA 95825 (916) 568-1821

THIS DRAWING IS NOT FINAL OR TO BE USED FOR CONSTRUCTION UNTIL IT IS SIGNED BY THE ARCHITECT AND THE OWNER.

ARCHITECT
EDWARD P. ENGLISH C-10399
RICHARD L. HARPER C-13830
RONALD A. RETA C- 9879

OWNER

CONTRACTOR

LICENSED ARCHITECT RONALD A. RETA No. C-9879 REN. 3-31-01 STATE OF CALIFORNIA

Turner Construction Company

This set of plans and calculations MUST be kept on the job at all times and it is unlawful to make any changes or alterations on same without written permission from Building Inspection Dept. of Stockton.
APPROVED
By _____ Date _____

This stamping of this plan and specification SHALL NOT be held to permit or be an approval of the violation of any provisions of any Ordinance or Law. Occupancy of structure not permitted until after final approval.

APPROVED COPY

Essential Services Facility
(UNDER SEPARATE DOCUMENT PACKAGE)
Parking Garage

KEY PLAN

DATE	NO.	DESCRIPTION
1-13-2000	3	OVERALL PERMIT SET
11-15-99	2	OVERALL PLAN CHECK SET
10-18-99	1	PROGRESS SET

REVISIONS

DRAWN BY
JM

CHECKED BY
BH

Parking Garage
15 North El Dorado Street, Stockton, California
PROGRESS PRINT

DRAWING
SITE PLAN

PROJECT NO. 98113
DRAWING NO. A1.01G
CADFILE A1_01G
DATE 7 SEPTEMBER 1999

NOTE:

FIGURE ABOVE POINTER INDICATES ELEVATION OF STRUCTURAL CONC. FLOOR SLAB.

FIGURE BELOW POINTER REFERENCES CIVIL DWGS. INFORMATION

ELEVATIONS SHOWN INDICATE HEIGHTS ABOVE GROUND LEVEL DATUM 0'-0" (ACTUAL GROUND LEVEL DATUM AT +11.80' ABOVE SEA LEVEL. SEE CIVIL DRAWINGS)

WALL TYPE	DESCRIPTION
1	PRECAST CONCRETE PANEL. SEE PRECAST CONC. DRAWINGS FOR TYPICAL DETAILS
2 2A — 5/A2.04C 30/A2.05G	NON-RATED, FULL HEIGHT SHAFTWALL 1" TYPE 'X' GYP BD. LINER PANEL (ON SHAFT SIDE) SET BETWEEN 4" METAL 'CH' STUDS WITH 5/8" EXTERIOR GRADE GYPSUM SHEATHING AND TEXTURED ELASTOMERIC FINISH SYSTEM –INCLUDE R-13 BATT. INSUL. AT WALL TYPE 2A
3 3A	8"x8"x16", REINFORCED, SOLID GROUTED, FULL HT. U.O.N., CONCRETE MASONRY UNIT (CMU) WALL. SEE STRUCT. DWGS. FOR TYPICAL DETAILS AND EXPANSION JOINTS. –SEE FIRE RATED DTL. 26/A2.04G FOR WALL TYPE 3A
4 4A 4B — 10/A2.04G	NON-RATED, FULL-HEIGHT 4" METAL STUDS WITH 5/8" TYPE 'X' W.R. GYP. BD. ON ROOM SIDE, WITH 1/2" EXTERIOR GRADE GYPSUM SHEATHING AND TEXTURED ELASTOMERIC FINISH SYSTEM AT SALLY PORT/GARAGE SIDE. –INCLUDE R-13 BATT. INSUL. AT WALL TYPE 4A –OMIT 5/8" TYPE 'X' GYP. BD. AT WALL TYPE 4B
5 — 15/A2.04G	NON-RATED, FULL-HEIGHT, 4" METAL STUDS WITH 5/8" TYPE 'X' W.R. GYP. BD. AT ELEVATOR SHAFT/ ROOM SIDE ONLY.

UNDER SEPARATE DOCUMENT PACKAGE

GROUND LEVEL PARKING PLAN
SCALE: 1/16"=1'-0"

PERIMETER DIMENSION PLAN (GROUND LEVEL PARKING)
30 / A2.01G 1/8"=1'-0"

ENGLISH HARPER RETA
ARCHITECTS

580 UNIVERSITY AVENUE SUITE 100
SACRAMENTO, CA 95825 (916) 568-1821

THIS DRAWING IS NOT FINAL OR TO BE USED FOR CONSTRUCTION UNTIL IT IS SIGNED BY THE ARCHITECT AND THE OWNER.

ARCHITECT
EDWARD P. ENGLISH C-10399
RICHARD L. HARPER C-13830
RONALD A. RETA C- 9879

OWNER

CONTRACTOR

REGISTERED ARCHITECT RICHARD L. HARPER REN.3-31-01 STATE OF CALIFORNIA

Turner Construction Company

This set of plans and specifications MUST be kept on the job at all times and it is unlawful to make any changes or alterations on same without permission from the Building Official of the City of Stockton.

By _____

The stamping of this plan and specification shall NOT be held to permit or to be an approval of the violation of any provisions of any Ordinance or Law. Occupancy of space shall not be permitted until after final approval.

CONTRACT COPY

Essential Services Facility
(UNDER SEPARATE DOCUMENT PACKAGE)
Parking Garage

KEY PLAN

DATE	NO.	DESCRIPTION
1-13-2000	3	OVERALL PERMIT SET
11-15-99	2	OVERALL PLAN CHECK SET
10-18-99	1	PROGRESS SET

REVISIONS
DRAWN BY
CHECKED BY

Parking Garage
15 North El Dorado Street, Stockton, California
PROGRESS PRINT

DRAWING
GROUND LEVEL PARKING PLAN

PROJECT NO. 9811.3
DRAWING NO. A2.01G
CADFILE A2_01G
DATE 7 SEPTEMBER 1999

PLANS REVIEWED BY Precision Inspection Company Inspection and Consulting Services

NOTES:

1. SEE STRUCTURAL FLOOR PLANS FOR CONCRETE DECK SPOT ELEVATIONS

WALL TYPE	DESCRIPTION
1	PRECAST CONCRETE PANEL. SEE PRECAST CONC. DRAWINGS FOR TYPICAL DETAILS
2 2A — 5/A2.04G 30/A2.05G	NON-RATED, FULL HEIGHT SHAFTWALL 1" TYPE 'X' GYP BD. LINER PANEL (ON SHAFT SIDE) SET BETWEEN 4" METAL 'CH' STUDS WITH 5/8" EXTERIOR GRADE GYPSUM SHEATHING AND TEXTURED ELASTOMERIC FINISH SYSTEM –INCLUDE R-13 BATT. INSUL. AT WALL TYPE 2A
3 3A	8"x8"x16", REINFORCED, SOLID GROUTED, FULL HT. U.O.N., CONCRETE MASONRY UNIT (CMU) WALL. SEE STRUCT. DWGS. FOR TYPICAL DETAILS AND EXPANSION JOINTS. –SEE FIRE RATED DTL. 26/A2.04G FOR WALL TYPE 3A
4 4A 4B — 10/A2.04G	NON-RATED, FULL-HEIGHT 4" METAL STUDS WITH 5/8" TYPE 'X' W.R. GYP. BD. ON ROOM SIDE, WITH 1/2" EXTERIOR GRADE GYPSUM SHEATHING AND TEXTURED ELASTOMERIC FINISH SYSTEM AT SALLY PORT/GARAGE SIDE. –INCLUDE R-13 BATT. INSUL AT WALL TYPE 4A –OMIT 5/8" TYPE 'X' GYP. BD. AT WALL TYPE 4B
5 — 15/A2.04G	NON-RATED, FULL-HEIGHT, 4" METAL STUDS WITH 5/8" TYPE 'X' W.R. GYP. BD. AT ELEVATOR SHAFT/ ROOM SIDE ONLY.

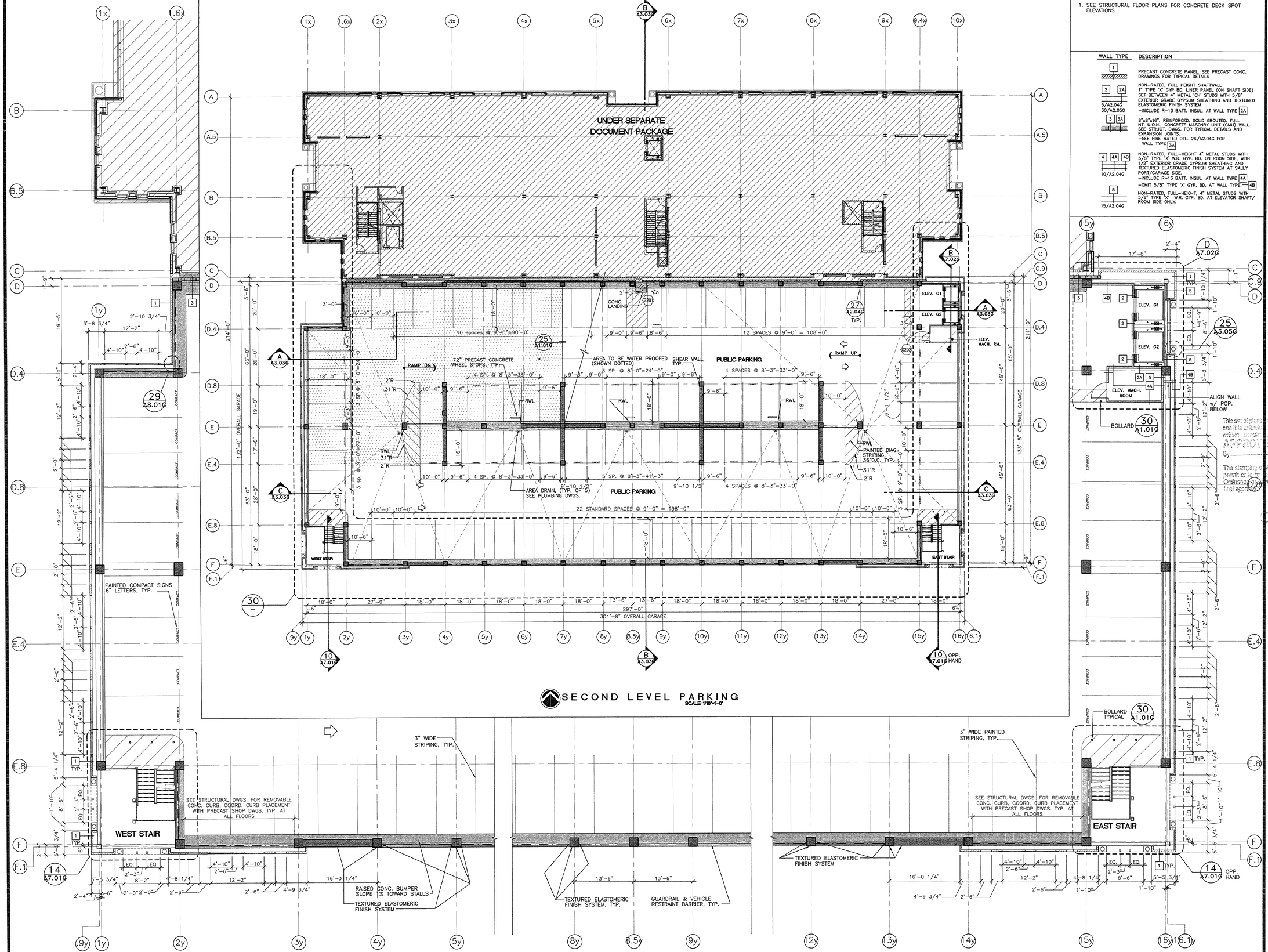

ENGLISH HARPER RETA
ARCHITECTS

580 UNIVERSITY AVENUE SUITE 100
SACRAMENTO, CA 95825 (916) 568-1821

THIS DRAWING IS NOT FINAL OR TO BE USED FOR CONSTRUCTION UNTIL IT IS SIGNED BY THE ARCHITECT AND THE OWNER.

ARCHITECT
EDWARD P. ENGLISH C-10399
RICHARD L. HARPER C-13830
RONALD A. RETA C- 9879

OWNER

CONTRACTOR

LICENSED ARCHITECT RONALD A. RETA No. C-9879 REN. 3-31-01 STATE OF CALIFORNIA

Turner Construction Company

This set of plans and specifications MUST be kept on the job at all times and it is unlawful to make any changes or alterations on same without written permission from Building Inspection, City of Stockton.
APPROVED
By
The stamping of this plan and specifications shall not be held to permit or to be an approval of the violation of any provisions of any Ordinance of the City. Occupancy of structure not permitted until asset final approval.
OFFICE COPY

Essential Services Facility (UNDER SEPARATE DOCUMENT PACKAGE)
Parking Garage

KEY PLAN

DATE	NO.	DESCRIPTION
1-13-2000	3	OVERALL PERMIT SET
11-15-99	2	OVERALL PLAN CHECK SET
10-18-99	1	PROGRESS SET

REVISIONS

DRAWN BY
JM

CHECKED BY
BH

Parking Garage
15 North El Dorado Street, Stockton, California
PROGRESS PRINT

DRAWING
SECOND LEVEL PARKING PLAN

PROJECT NO. 98113
DRAWING NO. A2.02G
CADFILE A2_02G
DATE 7 SEPTEMBER 1999

PLANS REVIEWED BY
Precision Inspection Company
Inspection and Consulting Services
Page 10 of 104

NOTES:

1. SEE STRUCTURAL FLOOR PLANS FOR CONCRETE DECK SPOT ELEVATIONS

WALL TYPE	DESCRIPTION
1	PRECAST CONCRETE PANEL. SEE PRECAST CONC. DRAWINGS FOR TYPICAL DETAILS
2 2A — 5/A2.04G 30/A2.05G	NON-RATED, FULL HEIGHT SHAFTWALL 1" TYPE 'X' GYP BD. LINER PANEL (ON SHAFT SIDE) SET BETWEEN 4" METAL 'CH' STUDS WITH 5/8" EXTERIOR GRADE GYPSUM SHEATHING AND TEXTURED ELASTOMERIC FINISH SYSTEM –INCLUDE R-13 BATT. INSUL. AT WALL TYPE 2A
3 3A	8"x8"x16", REINFORCED, SOLID GROUTED, FULL HT. U.O.N., CONCRETE MASONRY UNIT (CMU) WALL. SEE STRUCT. DWGS. FOR TYPICAL DETAILS AND EXPANSION JOINTS. –SEE FIRE RATED DTL. 26/A2.04G FOR WALL TYPE 3A
4 4A 4B — 10/A2.04G	NON-RATED, FULL-HEIGHT 4" METAL STUDS WITH 5/8" TYPE 'X' W.R. GYP. BD. ON ROOM SIDE, WITH 1/2" EXTERIOR GRADE GYPSUM SHEATHING AND TEXTURED ELASTOMERIC FINISH SYSTEM AT SALLY PORT/GARAGE SIDE. –INCLUDE R-13 BATT. INSUL. AT WALL TYPE 4A –OMIT 5/8" TYPE 'X' GYP. BD. AT WALL TYPE 4B
5 — 15/A2.04G	NON-RATED, FULL-HEIGHT, 4" METAL STUDS WITH 5/8" TYPE 'X' W.R. GYP. BD. AT ELEVATOR SHAFT/ ROOM SIDE ONLY.

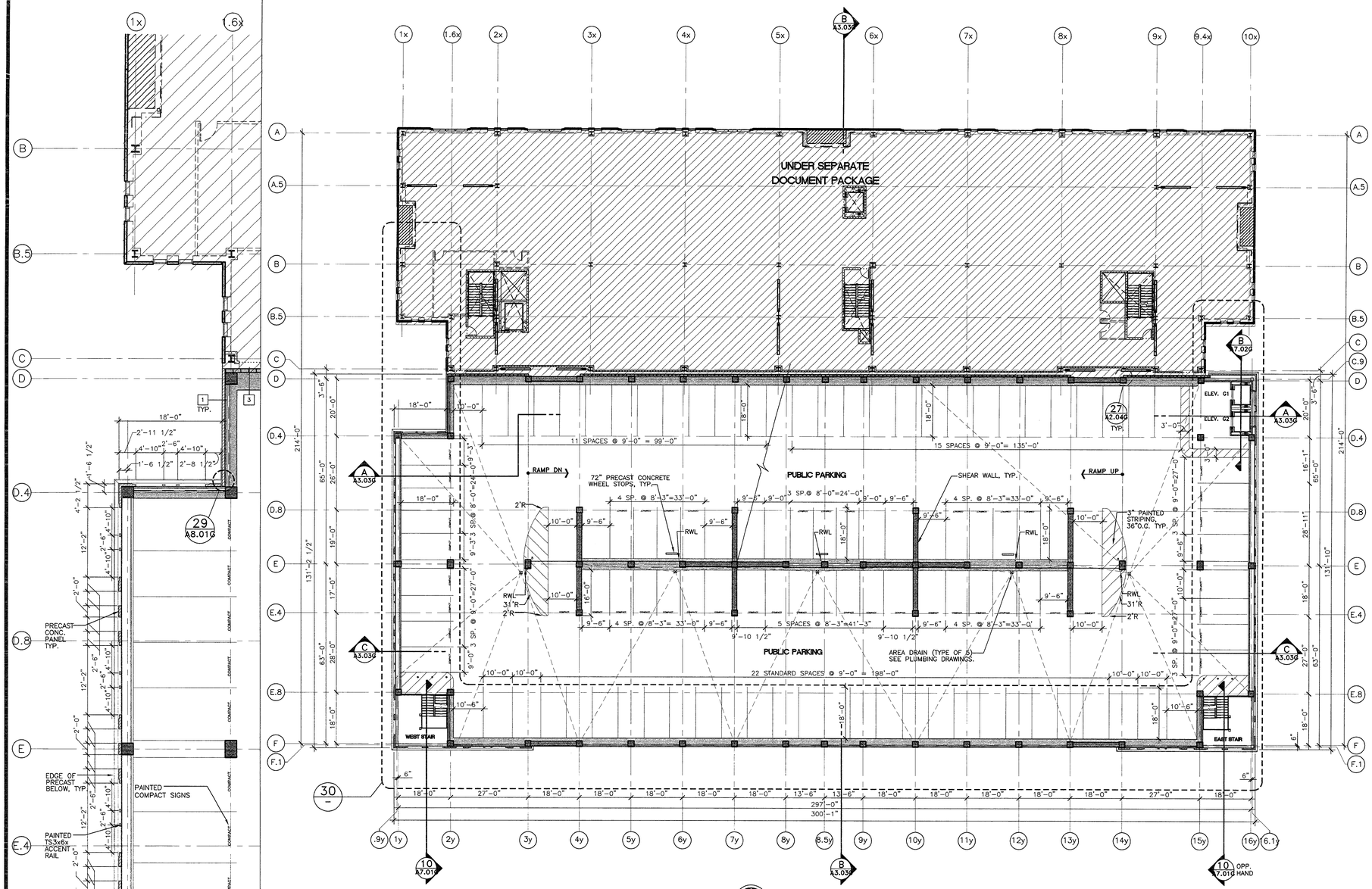

THIRD LEVEL PARKING
SCALE: 1/16"=1'-0"

30/A2.02G PERIMETER DIMENSION PLAN THIRD LEVEL PARKING
SCALE: 1/8"=1'-0"

PLANS REVIEWED BY
Precision Inspection Company
Inspection and Consulting Services
Page 7 Of 14

ENGLISH HARPER RETA
ARCHITECTS

580 UNIVERSITY AVENUE SUITE 100
SACRAMENTO, CA 95825 (916) 568-1821

THIS DRAWING IS NOT FINAL OR TO BE USED FOR CONSTRUCTION UNTIL IT IS SIGNED BY THE ARCHITECT AND THE OWNER.

ARCHITECT
EDWARD P. ENGLISH C-10399
RICHARD L. HARPER C-13830
RONALD A. RETA C- 9879

OWNER

CONTRACTOR

LICENSED ARCHITECT RONALD A. RETA No. C-9830 REN. 3-31-01 STATE OF CALIFORNIA

Turner Construction Company

This set of plans and calculations MUST be kept on the job at all times and it is unlawful to make any changes or alterations on same without written permission from Building Inspection, City of Stockton.
APPROVED
DATE
By

The stamping of this plan and specification shall not be held to permit or to be approval of the violation of any provisions of any Ordinance or law. Occupancy of premises not permitted until final approval.

OFFICE COPY

Essential Services Facility (UNDER SEPARATE DOCUMENT PACKAGE)
Parking Garage

KEY PLAN

1-13-2000	3	OVERALL PERMIT SET
11-15-99	2	OVERALL PLAN CHECK SET
10-18-99	1	PROGRESS SET
DATE	NO.	DESCRIPTION

REVISIONS

DRAWN BY
JM

CHECKED BY
BH

Parking Garage
15 North El Dorado Street, Stockton, California
PROGRESS PRINT

DRAWING
THIRD LEVEL PARKING PLAN

PROJECT NO. 98113
DRAWING NO. A2.03G
CADFILE A2_03G
DATE 7 SEPTEMBER 1999

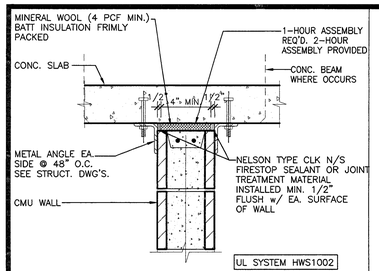

26 A2.04G 1 HR. RATED JOINT

1 1/2"=1'-0"

ESF_8062

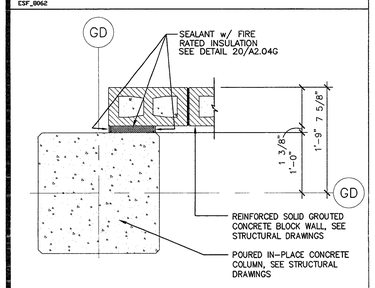

27 A2.04G 4 HOUR RATED JOINT

1"=1'-0"

ESF_8061

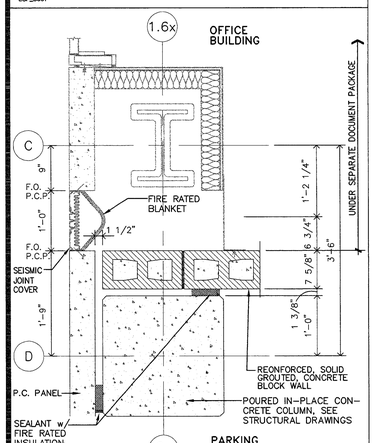

28 A2.04G WEST SEISMIC JOINT

1"=1'-0"

ESF_8053

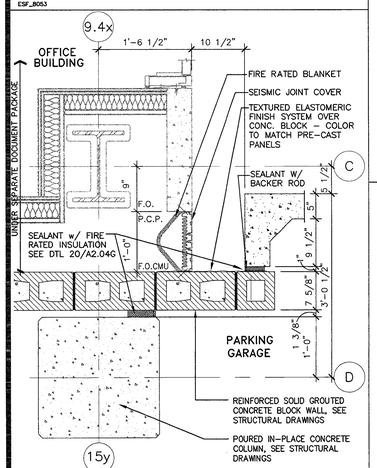

30 A2.04G EAST SEISMIC JOINT

1"=1'-0"

ESF_8054

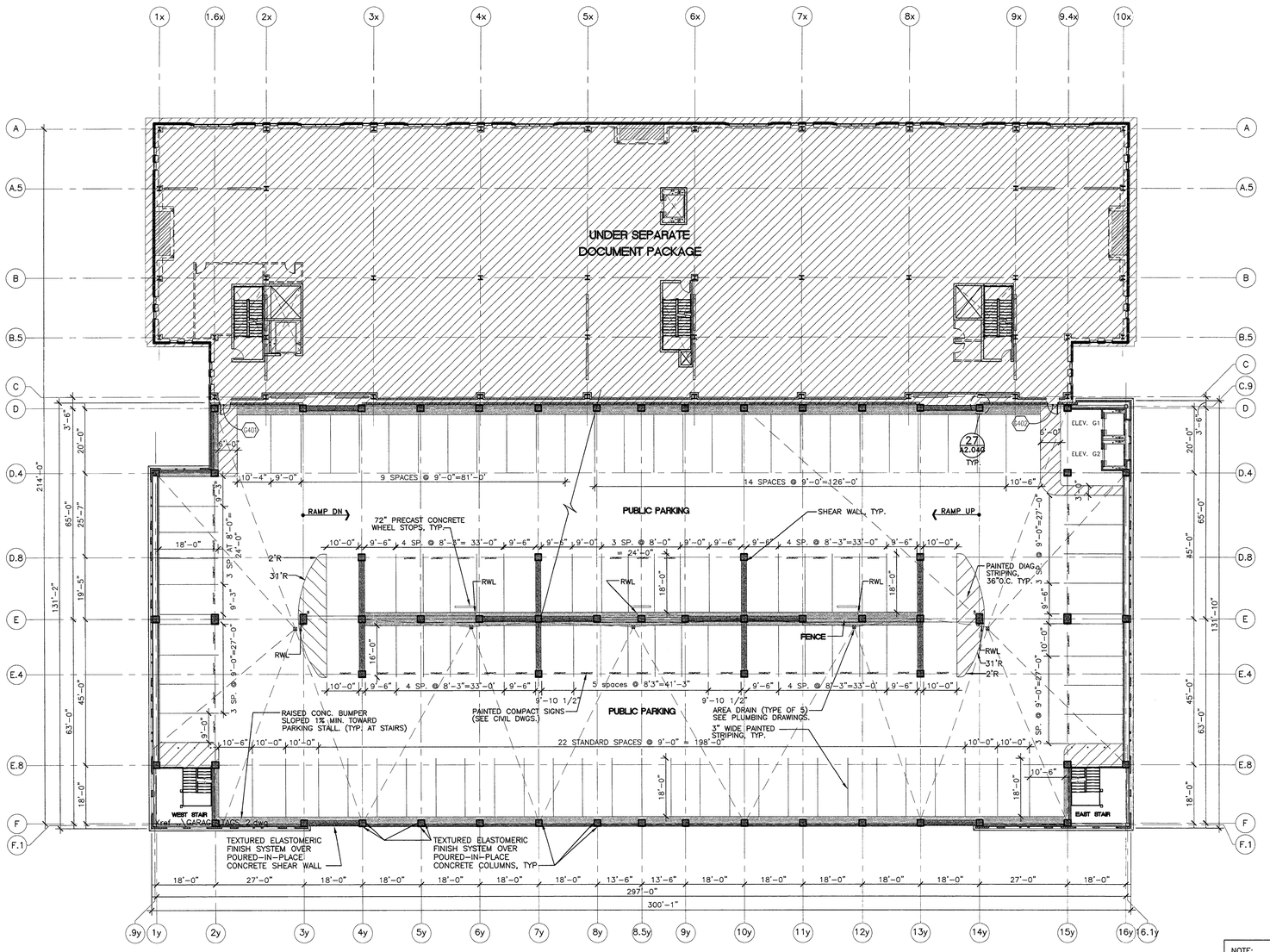

NOTES:

1. SEE STRUCTURAL FLOOR PLANS FOR CONCRETE DECK SPOT ELEVATIONS

WALL TYPE	DESCRIPTION
1	PRECAST CONCRETE PANEL. SEE PRECAST CONC. DRAWINGS FOR TYPICAL DETAILS
2 2A 5/A2.04G 30/A2.05G	NON-RATED, FULL HEIGHT SHAFTWALL 1" TYPE 'X' GYP BD. LINER PANEL (ON SHAFT SIDE) SET BETWEEN 4" METAL 'OH' STUDS WITH 5/8" EXTERIOR GRADE GYPSUM SHEATHING AND TEXTURED ELASTOMERIC FINISH SYSTEM –INCLUDE R-13 BATT. INSUL. AT WALL TYPE 2A
3 3A	8"x8"x16", REINFORCED, SOLID GROUTED, FULL HT. U.O.N., CONCRETE MASONRY UNIT (CMU) WALL. SEE STRUCT. DWGS. FOR TYPICAL DETAILS AND EXPANSION JOINTS. –SEE FIRE RATED DTL. 26/A2.04G FOR WALL TYPE 3A
4 4A 4B 10/A2.04G	NON-RATED, FULL-HEIGHT 4" METAL STUDS WITH 5/8" TYPE 'X' W.R. GYP. BD. ON ROOM SIDE, WITH 1/2" EXTERIOR GRADE GYPSUM SHEATHING AND TEXTURED ELASTOMERIC FINISH SYSTEM AT SALLY PORT/GARAGE SIDE. –INCLUDE R-13 BATT. INSUL. AT WALL TYPE 4A –OMIT 5/8" TYPE 'X' GYP. BD. AT WALL TYPE 4B
5 15/A2.04G	NON-RATED, FULL-HEIGHT, 4" METAL STUDS WITH 5/8" TYPE 'X' W.R. GYP. BD. AT ELEVATOR SHAFT/ ROOM SIDE ONLY.

NOTE:
SEE SHEET A2.03G FOR PERIMETER PRECAST PANEL DIMENSIONS AND NOTES

FOURTH LEVEL PARKING

SCALE: 1/16"=1'-0"

PLANS REVIEWED BY Precision Inspection Company and Location and Consulting Services Page ___ Of ___

NOTE:
SEE STRUCTURAL DRAWINGS FOR TYPICAL NOTES & DETAILS

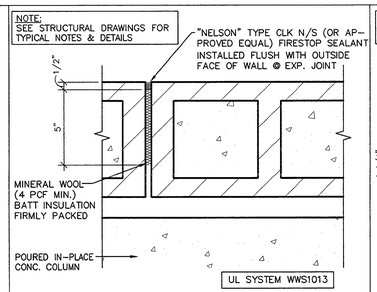

20 A2.04G 4-HR. RATED CMU EXP. JOINT

3"=1'-0"

ESF_9045

NOTE:
SEE STRUCTURAL DRAWINGS FOR TYPICAL FRAMING NOTES & DETAILS

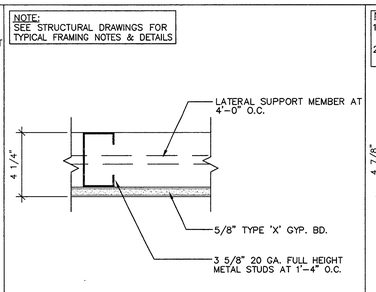

15 A2.04G NON-RATED FULL HT. WALL

3"=1'-0"

ESF_9079

NOTES:
1. SEE STRUCTURAL DRAWINGS FOR TYPICAL FRAMING NOTES & DETAILS
2. FOR HEAD & SILL CONNECTIONS SEE 30/A2.05G

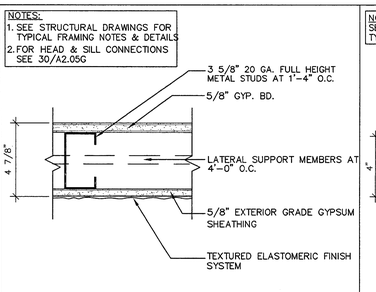

10 A2.04G NON-RATED FULL HT. WALL

3"=1'-0"

ESF_9061

NOTE:
SEE STRUCTURAL DRAWINGS FOR TYPICAL FRAMING NOTES & DETAILS

NOTE:
PROVIDE AND INSTALL LATERAL OR DIAGONAL BRACING USING HORIZONTAL STRAPS AND SOLID BRIDGING AS REQUIRED AT 4'-0" O.C. MAX.

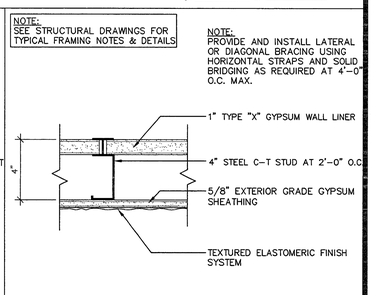

5 A2.04G NON-RATED SHAFT WALL

3"=1'-0"

ESF_9064

ENGLISH HARPER RETA
ARCHITECTS

580 UNIVERSITY AVENUE SUITE 100
SACRAMENTO, CA 95825 (916) 568-1821

THIS DRAWING IS NOT FINAL OR TO BE USED FOR CONSTRUCTION UNTIL IT IS SIGNED BY THE ARCHITECT AND THE OWNER.

ARCHITECT
EDWARD P. ENGLISH C-10399
RICHARD L. HARPER C-13830
RONALD A. RETA C- 9879

OWNER

CONTRACTOR

LICENSED ARCHITECT RONALD A. RETA No. C-9879 REN. 3-31-01 STATE OF CALIFORNIA

Turner Construction Company

This set of plans and specifications MUST be kept on the job at all times and it is unlawful to make any changes or alterations on same without written permission from Building Inspection, City of Stockton.
APPROVED Date _____
By _____ Permit No. _____

The stamping of this plan and specifications SHALL NOT be held to permit or to be an approval of the violation of any provisions of any Ordinance or Law. Occupancy is allowable not permitted until after final approval.

OFFICIAL COPY

Essential Services Facility (UNDER SEPARATE DOCUMENT PACKAGE)
Parking Garage

KEY PLAN

DATE	NO.	DESCRIPTION
1-13-2000	3	OVERALL PERMIT SET
11-15-99	2	OVERALL PLAN CHECK SET
10-18-99	1	PROGRESS SET

REVISIONS

DRAWN BY
JM

CHECKED BY
BH

Parking Garage
15 North El Dorado Street, Stockton, California
PROGRESS PRINT

DRAWING
FOURTH LEVEL PARKING AND WALL DETAILS

PROJECT NO. 98113
DRAWING NO. A2.04G
CADFILE A2_04G
DATE 7 SEPTEMBER 1999

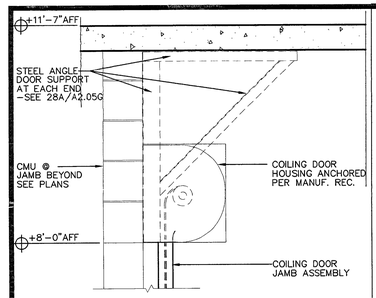

26 A2.05G COILING DOOR HEAD
1"=1'-0"

ESF_8074A

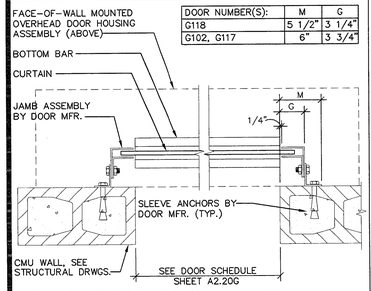

DOOR NUMBER(S):	M	G
G118	5 1/2"	3 1/4"
G102, G117	6"	3 3/4"

27 A2.05G COILING DOOR JAMB
1 1/2"=1'-0"

ESF_8085

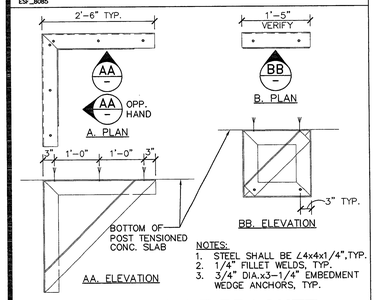

NOTES:
1. STEEL SHALL BE ∠4x4x1/4", TYP.
2. 1/4" FILLET WELDS, TYP.
3. 3/4" DIA.x3-1/4" EMBEDMENT WEDGE ANCHORS, TYP.

28 A2.05G METAL ANGLE BRACKET
N.T.S.

ESF_8086

PRIOR TO DRILLING EXP. ANCHORS IN POST TENSIONED CONC. SLABS/BEAMS, CONTRACTOR SHALL LOCATE & MAINTAIN 2" CLEARANCE TO ANY TENDONS.

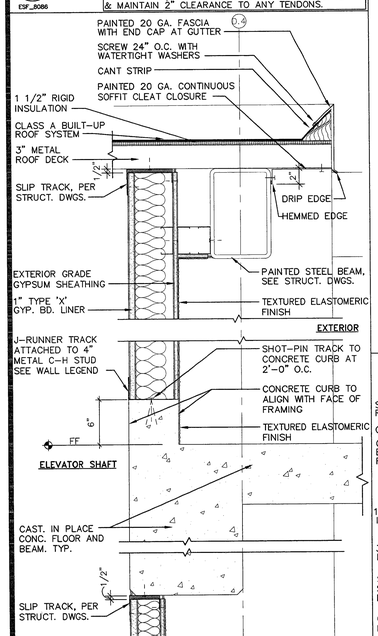

30 A2.05G WALL BASE @ ELEVATOR SHAFT
1 1/2"=1'-0"

ESF_9057

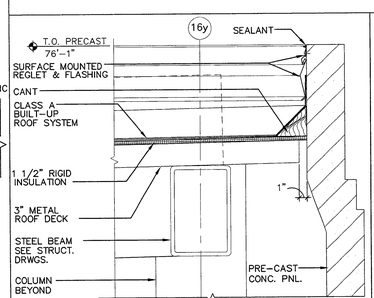

25 A2.05G ROOF TO PRECAST
1 1/2"=1'-0"

ESF_9058

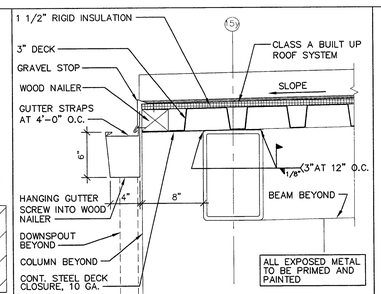

20 A2.05G GUTTER INSTALLATION
1 1/2"=1'-0"

ESF_9080

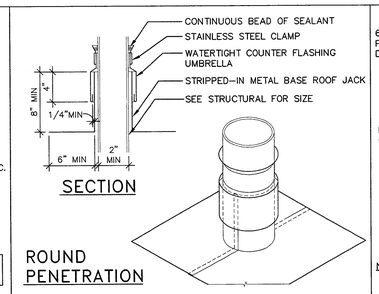

15 A2.05G ROOF PENETRATION FLASH'G
1 1/2"=1'-0"

ESF_8055

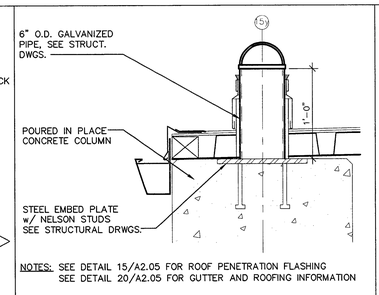

NOTES: SEE DETAIL 15/A2.05 FOR ROOF PENETRATION FLASHING
SEE DETAIL 20/A2.05 FOR GUTTER AND ROOFING INFORMATION

10 A2.05G SAFETY TIE BACK
1 1/2"=1'-0"

ESF_9082

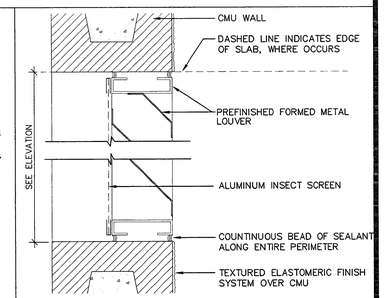

5 A2.05G LOUVER DETAIL
3"=1'-0"

ESF_8037

NOTES:
1. SEE STRUCTURAL FLOOR PLANS FOR CONCRETE DECK SPOT ELEVATIONS

WALL TYPE	DESCRIPTION
1	PRECAST CONCRETE PANEL. SEE PRECAST CONC. DRAWINGS FOR TYPICAL DETAILS
2 2A 5/A2.04G 30/A2.05G	NON-RATED, FULL HEIGHT SHAFTWALL 1" TYPE 'X' GYP BD. LINER PANEL (ON SHAFT SIDE) SET BETWEEN 4" METAL 'CH' STUDS WITH 5/8" EXTERIOR GRADE GYPSUM SHEATHING AND TEXTURED ELASTOMERIC FINISH SYSTEM -INCLUDE R-13 BATT. INSUL. AT WALL TYPE 2A
3 3A	8"x8"x16", REINFORCED, SOLID GROUTED, FULL HT. U.O.N., CONCRETE MASONRY UNIT (CMU) WALL. SEE STRUCT. DWGS. FOR TYPICAL DETAILS AND EXPANSION JOINTS. -SEE FIRE RATED DTL. 26/A2.04G FOR WALL TYPE 3A
4 4A 4B 10/A2.04G	NON-RATED, FULL-HEIGHT 4" METAL STUDS WITH 5/8" TYPE 'X' W.R. GYP. BD. ON ROOM SIDE, WITH 1/2" EXTERIOR GRADE GYPSUM SHEATHING AND TEXTURED ELASTOMERIC FINISH SYSTEM AT SALLY PORT/GARAGE SIDE. -INCLUDE R-13 BATT. INSUL. AT WALL TYPE 4A -OMIT 5/8" TYPE 'X' GYP. BD. AT WALL TYPE 4B
5 15/A2.04G	NON-RATED, FULL-HEIGHT, 4" METAL STUDS WITH 5/8" TYPE 'X' W.R. GYP. BD. AT ELEVATOR SHAFT/ ROOM SIDE ONLY.

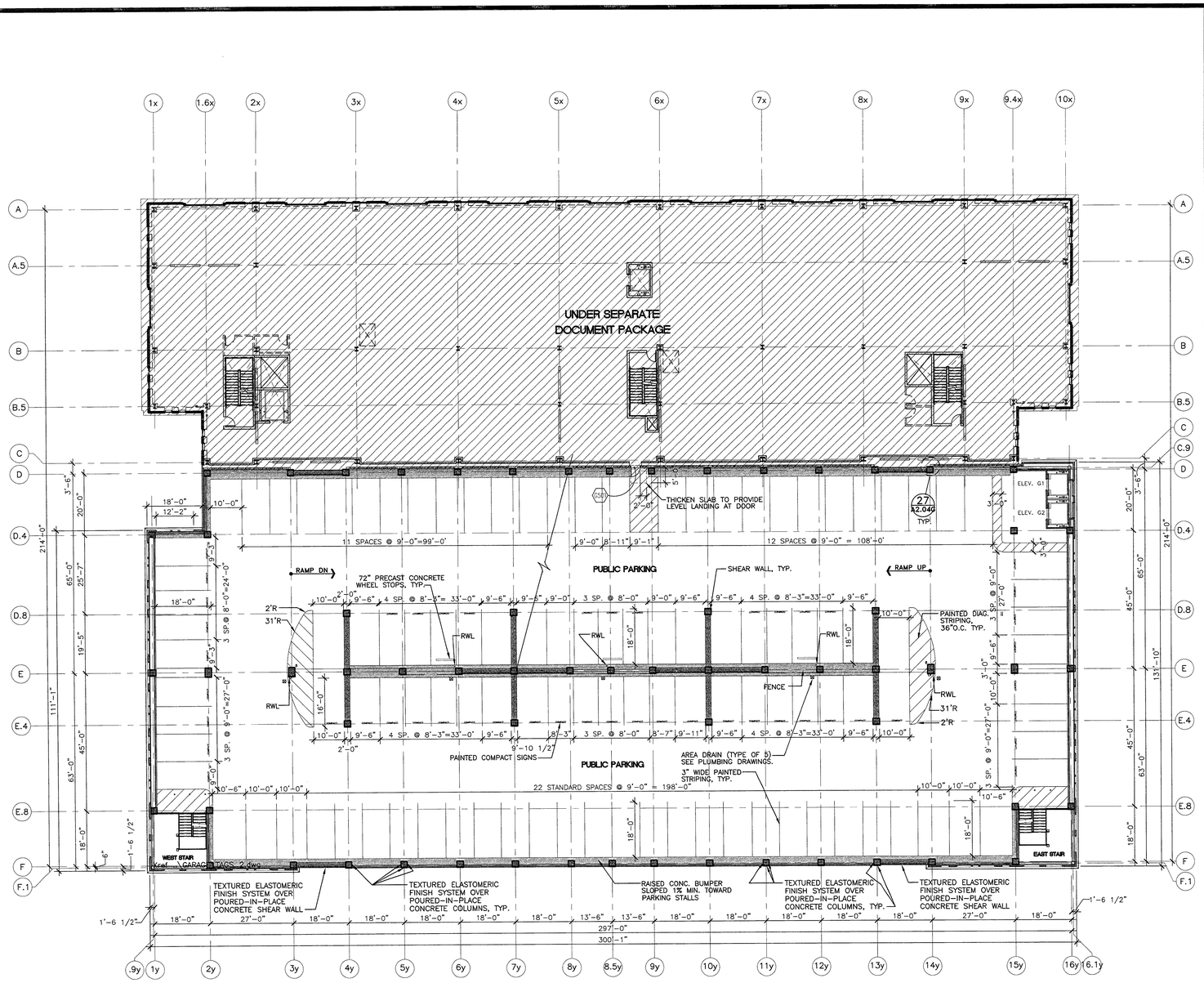

FIFTH LEVEL PARKING
SCALE: 1/16"=1'-0"

PLANS REVIEWED BY
Precision Inspection Company
Inspection and Consulting Services
Page 9 of 19

ENGLISH HARPER RETA
ARCHITECTS

580 UNIVERSITY AVENUE SUITE 100
SACRAMENTO, CA 95825 (916) 568-1821

THIS DRAWING IS NOT FINAL OR TO BE USED FOR CONSTRUCTION UNTIL IT IS SIGNED BY THE ARCHITECT AND THE OWNER.

ARCHITECT
EDWARD P. ENGLISH C-10399
RICHARD L. HARPER C-13530
RONALD A. RETA C- 9879

OWNER

CONTRACTOR

REGISTERED ARCHITECT RONALD A. RETA No. C-9879 REN. 3-31-01 STATE OF CALIFORNIA

Turner Construction Company

This set of plans and calculations MUST be kept on the job at all times and it is unlawful to make any changes or alterations on same without written permission. Plan Review by Precision, City of Stockton.

APPROVED Date _____

By _____

The stamping of this plan and specifications shall not be held to be a permit or to be an approval of all the provisions of any State law or City Ordinance or law. Occupancy of building not permitted until final approval.

OFFICE COPY

Essential Services Facility
(UNDER SEPARATE DOCUMENT PACKAGE)
Parking Garage

KEY PLAN

DATE	NO.	DESCRIPTION
1-13-2000	3	OVERALL PERMIT SET
11-15-99	2	OVERALL PLAN CHECK SET
10-18-99	1	PROGRESS SET

REVISIONS

DRAWN BY
JM

CHECKED BY

Parking Garage
15 North El Dorado Street, Stockton, California
PROGRESS PRINT

DRAWING
FIFTH LEVEL PARKING AND DETAILS

PROJECT NO. 98113
DRAWING NO. A2.05G
CADFILE A2_05G
DATE 7 SEPTEMBER 1999

NOTES:

1. SEE STRUCTURAL FLOOR PLANS FOR CONCRETE DECK SPOT ELEVATIONS

WALL TYPE	DESCRIPTION
1	PRECAST CONCRETE PANEL. SEE PRECAST CONC. DRAWINGS FOR TYPICAL DETAILS
2 2A 5/A2.04G 30/A2.05G	NON-RATED, FULL HEIGHT SHAFTWALL 1" TYPE 'X' GYP BD. LINER PANEL (ON SHAFT SIDE) SET BETWEEN 4" METAL 'CH' STUDS WITH 5/8" EXTERIOR GRADE GYPSUM SHEATHING AND TEXTURED ELASTOMERIC FINISH SYSTEM –INCLUDE R-13 BATT. INSUL. AT WALL TYPE 2A
3 3A	8"x8"x16", REINFORCED, SOLID GROUTED, FULL HT. U.O.N., CONCRETE MASONRY UNIT (CMU) WALL. SEE STRUCT. DWGS. FOR TYPICAL DETAILS AND EXPANSION JOINTS. –SEE FIRE RATED DTL. 26/A2.04G FOR WALL TYPE 3A
4 4A 4B 10/A2.04G	NON-RATED, FULL-HEIGHT 4" METAL STUDS WITH 5/8" TYPE 'X' W.R. GYP. BD. ON ROOM SIDE, WITH 1/2" EXTERIOR GRADE GYPSUM SHEATHING AND TEXTURED ELASTOMERIC FINISH SYSTEM AT SALLY PORT/GARAGE SIDE. –INCLUDE R-13 BATT. INSUL. AT WALL TYPE 4A –OMIT 5/8" TYPE 'X' GYP. BD. AT WALL TYPE 4B
5 15/A2.04G	NON-RATED, FULL-HEIGHT, 4" METAL STUDS WITH 5/8" TYPE 'X' W.R. GYP. BD. AT ELEVATOR SHAFT/ ROOM SIDE ONLY.

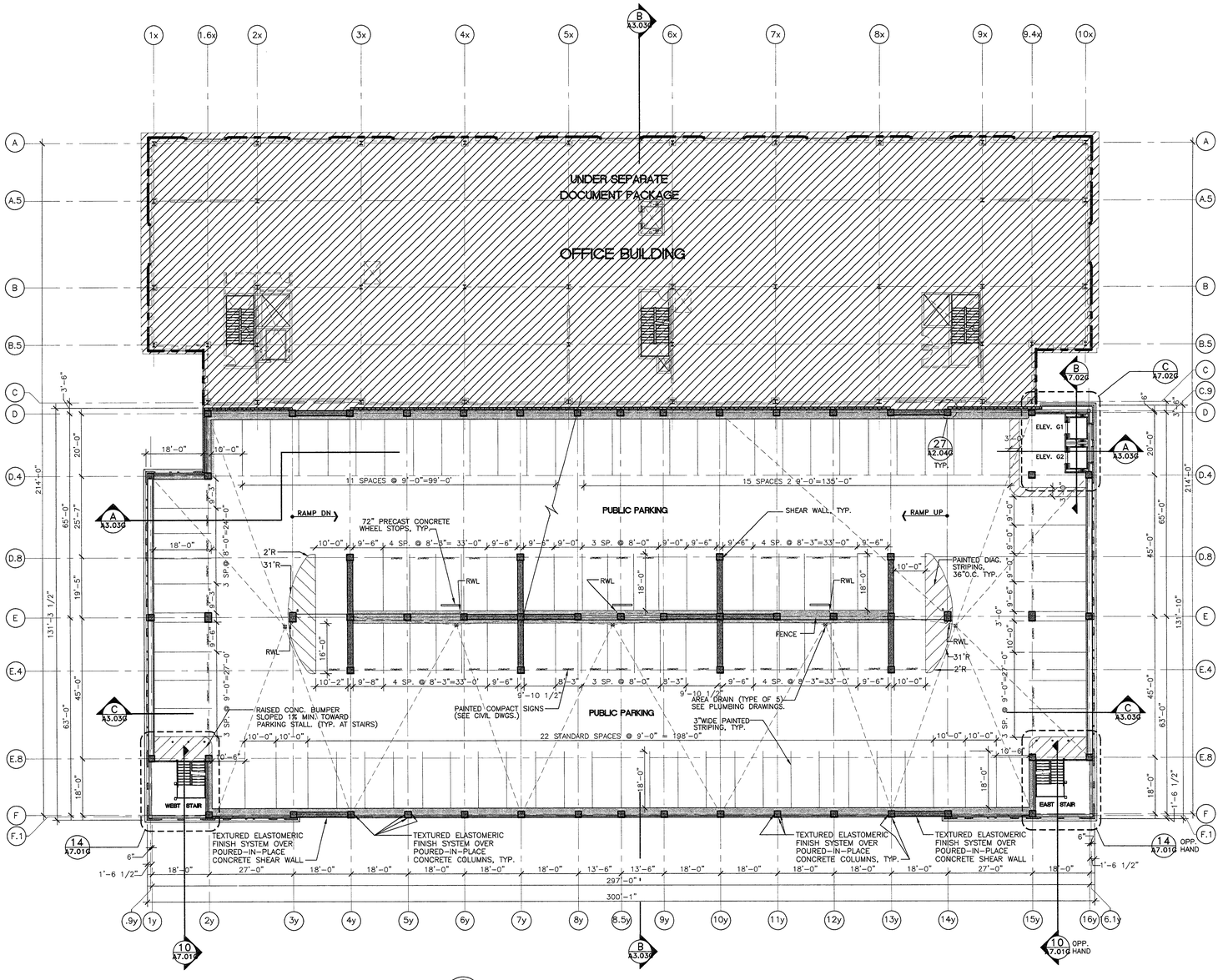

SIXTH LEVEL PARKING
SCALE: 1/16"=1'-0"

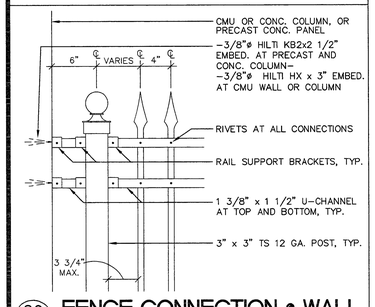

29 A2.06G — FENCE CONNECTION @ WALL
1 1/2"=1'-0"
ESF_8004

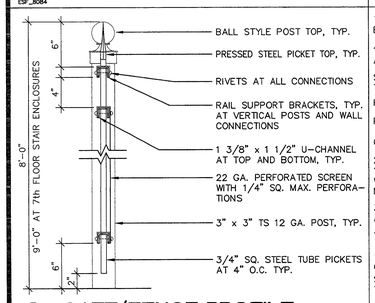

30 A2.06G — GATE/FENCE PROFILE
1 1/2"=1'-0"
ESF_8009

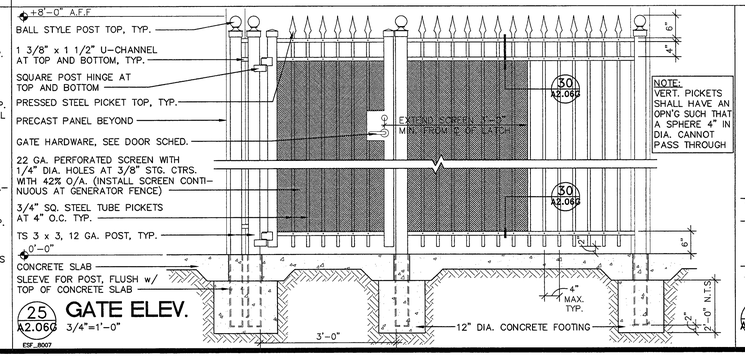

25 A2.06G — GATE ELEV.
3/4"=1'-0"
ESF_8007

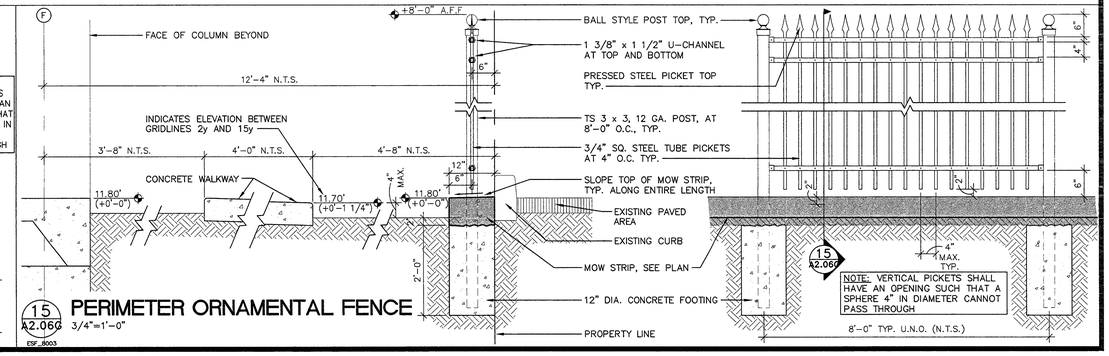

15 A2.06G — PERIMETER ORNAMENTAL FENCE
3/4"=1'-0"
ESF_8003

PLANS REVIEWED BY
Precision Inspection Company
Inspection and Consulting Services
Page 10 Of 04

ENGLISH HARPER RETA
ARCHITECTS

580 UNIVERSITY AVENUE SUITE 100
SACRAMENTO, CA 95825 (916) 568-1821

THIS DRAWING IS NOT FINAL OR TO BE USED FOR CONSTRUCTION UNTIL IT IS SIGNED BY THE ARCHITECT AND THE OWNER.

ARCHITECT
EDWARD P. ENGLISH C-10399
RICHARD L. HARPER C-13830
RONALD A. RETA C- 9879

OWNER

CONTRACTOR

REGISTERED ARCHITECT EDWARD P. ENGLISH No. C-10399 RENEWAL 3-31-01 STATE OF CALIFORNIA

Turner Construction Company

This set of plans and specifications MUST be kept on the job at all times and it is unlawful to make any changes or alterations on same without written permission from Building Division. Any alterations

APPROVED

By

The stamping of this plan is not to be construed as a permit or to be an approval of any violation of any provision of any Ordinance or Law. Occupancy is prohibited prior to final approval.

OFFICIAL COPY

Essential Services Facility (UNDER SEPARATE DOCUMENT PACKAGE)

Parking Garage

KEY PLAN

DATE	NO.	DESCRIPTION
1-13-2000	3	OVERALL PERMIT SET
11-15-99	2	OVERALL PLAN CHECK SET
10-18-99	1	PROGRESS SET

REVISIONS

DRAWN BY
JM

CHECKED BY
BH

Parking Garage
15 North El Dorado Street, Stockton, California
PROGRESS PRINT

DRAWING
SIXTH LEVEL PARKING AND FENCE DETAILS

PROJECT NO. 98113
DRAWING NO. A2.06G
CADFILE A2_06G
DATE 7 SEPTEMBER 1999

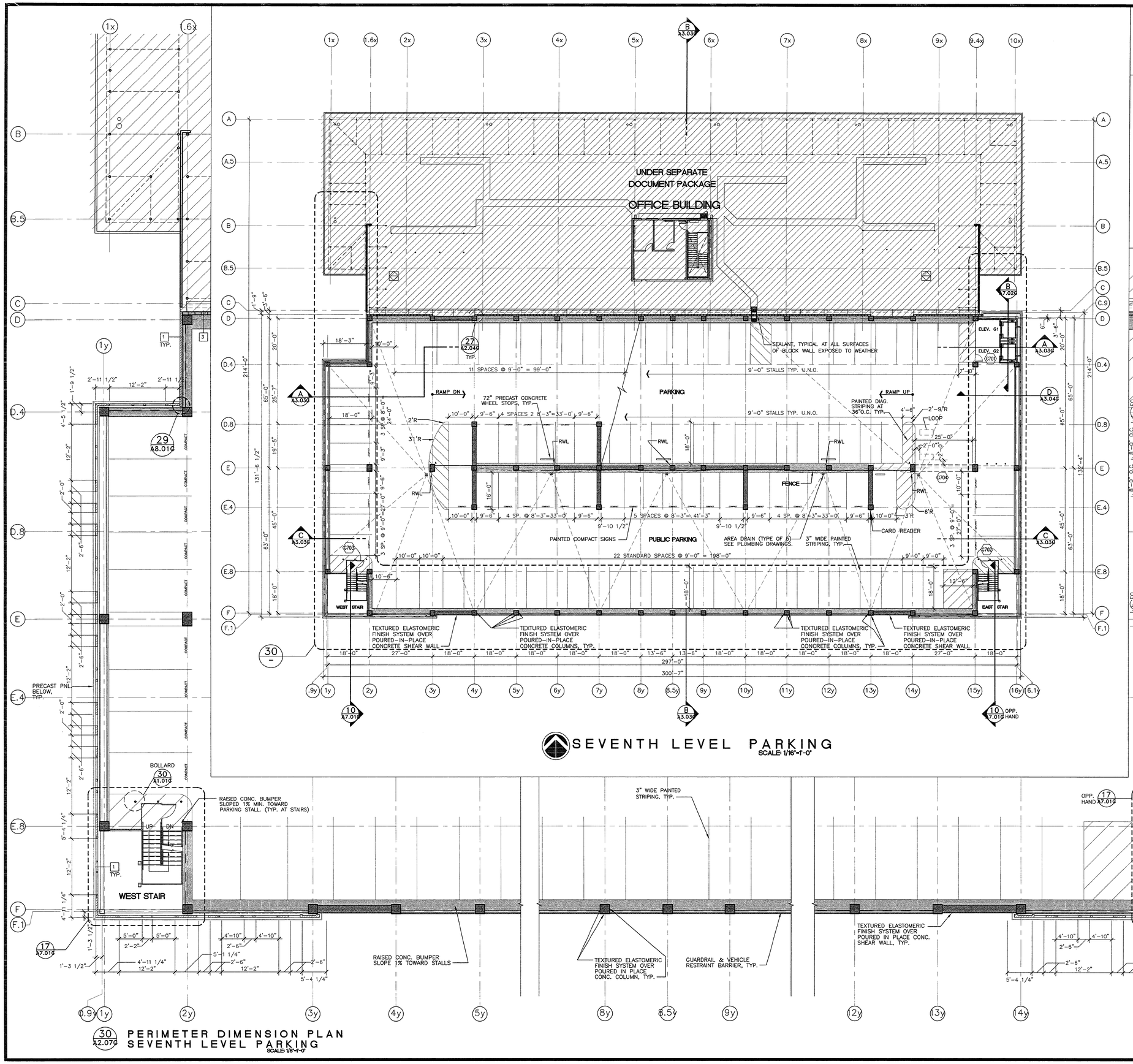

SEVENTH LEVEL PARKING
SCALE: 1/16"=1'-0"

30 A2.07G PERIMETER DIMENSION PLAN
SEVENTH LEVEL PARKING
SCALE: 1/8"=1'-0"

NOTES:

1. SEE STRUCTURAL FLOOR PLANS FOR CONCRETE DECK SPOT ELEVATIONS

WALL TYPE	DESCRIPTION
1	PRECAST CONCRETE PANEL. SEE PRECAST CONC. DRAWINGS FOR TYPICAL DETAILS
2 2A 5/A2.04G 30/A2.05G	NON-RATED, FULL HEIGHT SHAFTWALL 1" TYPE 'X' GYP BD. LINER PANEL (ON SHAFT SIDE) SET BETWEEN 4" METAL 'CH' STUDS WITH 5/8" EXTERIOR GRADE GYPSUM SHEATHING AND TEXTURED ELASTOMERIC FINISH SYSTEM -INCLUDE R-13 BATT. INSUL. AT WALL TYPE 2A
3 3A	8"x8"x16", REINFORCED, SOLID GROUTED, FULL HT. U.O.N., CONCRETE MASONRY UNIT (CMU) WALL. SEE STRUCT. DWGS. FOR TYPICAL DETAILS AND EXPANSION JOINTS. -SEE FIRE RATED DTL. 26/A2.04G FOR WALL TYPE 3A
4 4A 4B 10/A2.04G	NON-RATED, FULL-HEIGHT 4" METAL STUDS WITH 5/8" TYPE 'X' W.R. GYP. BD. ON ROOM SIDE, WITH 1/2" EXTERIOR GRADE GYPSUM SHEATHING AND TEXTURED ELASTOMERIC FINISH SYSTEM AT SALLY PORT/GARAGE SIDE. -INCLUDE R-13 BATT. INSUL. AT WALL TYPE 4A -OMIT 5/8" TYPE 'X' GYP. BD. AT WALL TYPE 4B
5 15/A2.04G	NON-RATED, FULL-HEIGHT, 4" METAL STUDS WITH 5/8" TYPE 'X' W.R. GYP. BD. AT ELEVATOR SHAFT/ ROOM SIDE ONLY.

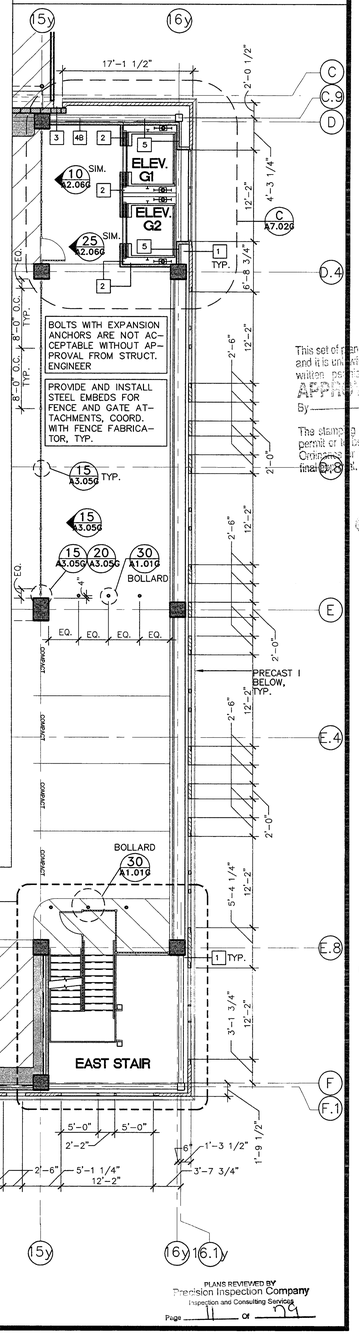

ENGLISH HARPER RETA
ARCHITECTS

580 UNIVERSITY AVENUE SUITE 100
SACRAMENTO, CA 95825 (916) 568-1821

THIS DRAWING IS NOT FINAL OR TO BE USED FOR CONSTRUCTION UNTIL IT IS SIGNED BY THE ARCHITECT AND THE OWNER.

ARCHITECT
EDWARD P. ENGLISH C-10399
RICHARD L. HARPER C-13830
RONALD A. RETA C- 9879

OWNER

CONTRACTOR

Turner Construction Company

This set of plans and calculations MUST be kept on the job at all times and it is unlawful to make any changes or alterations on same without written permission from Building Inspection, City of Stockton.
APPROVED Date
By Permit No.
The stamping of this plan and specifications SHALL NOT be held to permit or be an approval of the violation of any provisions of any Ordinance or Law. Occupancy or structure not authorized until after final approval.

OFFICE COPY

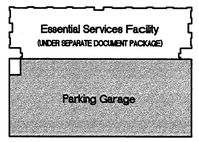

KEY PLAN

DATE	NO.	DESCRIPTION
1-13-2000	3	OVERALL PERMIT SET
11-15-99	2	OVERALL PLAN CHECK SET
10-18-99	1	PROGRESS SET

REVISIONS

DRAWN BY
RVC

CHECKED BY

Parking Garage
15 North El Dorado Street, Stockton, California
PROGRESS PRINT

DRAWING
SEVENTH LEVEL PARKING AND DETAILS

PROJECT NO. 98113
DRAWING NO. A2.07G
CADFILE A2_07G
DATE 7 SEPTEMBER 1999

PLANS REVIEWED BY Precision Inspection Company
Inspection and Consulting Services
Page 11 of 79

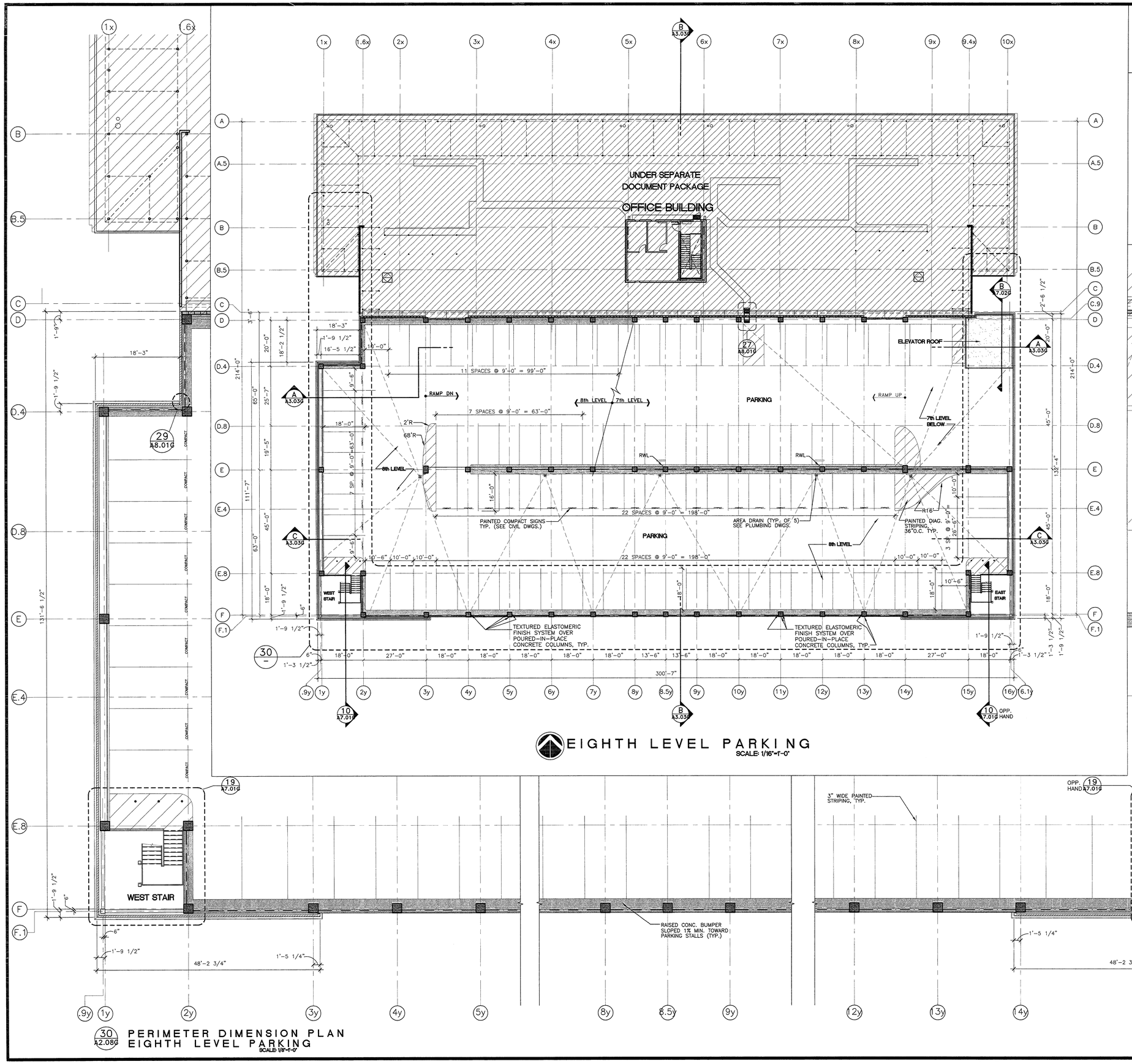

EIGHTH LEVEL PARKING
SCALE: 1/16"=1'-0"

30 A2.08G PERIMETER DIMENSION PLAN
EIGHTH LEVEL PARKING
SCALE: 1/8"=1'-0"

NOTES:

1. SEE STRUCTURAL FLOOR PLANS FOR CONCRETE DECK SPOT ELEVATIONS

WALL TYPE	DESCRIPTION
1	PRECAST CONCRETE PANEL. SEE PRECAST CONC. DRAWINGS FOR TYPICAL DETAILS
2 2A 5/A2.04G 30/A2.05G	NON-RATED, FULL HEIGHT SHAFTWALL 1" TYPE 'X' GYP BD. LINER PANEL (ON SHAFT SIDE) SET BETWEEN 4" METAL 'CH' STUDS WITH 5/8" EXTERIOR GRADE GYPSUM SHEATHING AND TEXTURED ELASTOMERIC FINISH SYSTEM -INCLUDE R-13 BATT. INSUL. AT WALL TYPE 2A
3 3A	8"x8"x16", REINFORCED, SOLID GROUTED, FULL HT. U.O.N., CONCRETE MASONRY UNIT (CMU) WALL. SEE STRUCT. DWGS. FOR TYPICAL DETAILS AND EXPANSION JOINTS. -SEE FIRE RATED DTL. 26/A2.04G FOR WALL TYPE 3A
4 4A 4B 10/A2.04G	NON-RATED, FULL-HEIGHT 4" METAL STUDS WITH 5/8" TYPE 'X' W.R. GYP. BD. ON ROOM SIDE, WITH 1/2" EXTERIOR GRADE GYPSUM SHEATHING AND TEXTURED ELASTOMERIC FINISH SYSTEM AT SALLY PORT/GARAGE SIDE. -INCLUDE R-13 BATT. INSUL. AT WALL TYPE 4A -OMIT 5/8" TYPE 'X' GYP. BD. AT WALL TYPE 4B
5 15/A2.04G	NON-RATED, FULL-HEIGHT, 4" METAL STUDS WITH 5/8" TYPE 'X' W.R. GYP. BD. AT ELEVATOR SHAFT/ ROOM SIDE ONLY.

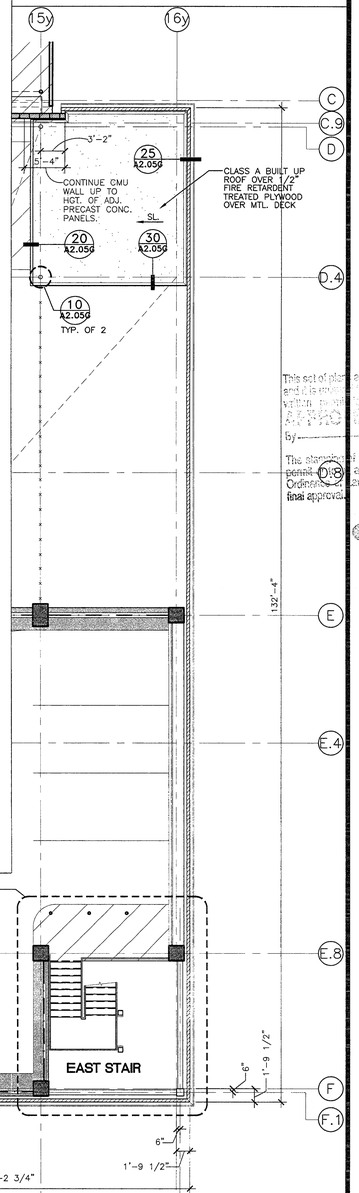

ENGLISH HARPER RETA
ARCHITECTS

580 UNIVERSITY AVENUE SUITE 100
SACRAMENTO, CA 95825 (916) 568-1821

THIS DRAWING IS NOT FINAL OR TO BE USED FOR CONSTRUCTION UNTIL IT IS SIGNED BY THE ARCHITECT AND THE OWNER.

ARCHITECT
EDWARD P. ENGLISH C-10399
RICHARD L. HARPER C-13830
RONALD A. RETA C- 9879

OWNER

CONTRACTOR

LICENSED ARCHITECT RICHARD L. HARPER REN. 3-31-01 STATE OF CALIFORNIA

Turner Construction Company

This set of plans and calculations MUST be kept on the job at all times and it is unlawful to make any changes or alterations on same without written permission from Building Inspection, City of Stockton.

By

The stamping of this plan and specifications SHALL NOT be held to permit or be an approval of the violation of any provisions of any Ordinance or Law. Occupancy of structure not permitted until after final approval.

OFFICE COPY

Essential Services Facility (UNDER SEPARATE DOCUMENT PACKAGE)

Parking Garage

KEY PLAN

DATE	NO.	DESCRIPTION
1-13-2000	3	OVERALL PERMIT SET
11-15-99	2	OVERALL PLAN CHECK SET
10-18-99	1	PROGRESS SET

REVISIONS

DRAWN BY
RVC

CHECKED BY

Parking Garage
15 North El Dorado Street, Stockton, California
PROGRESS PRINT

DRAWING
EIGHTH LEVEL PARKING AND DETAILS

PROJECT NO. 98113
DRAWING NO. A2.08G
CADFILE A2_08G
DATE 7 SEPTEMBER 1999

PLANS REVIEWED BY Precision Inspection Company Inspection and Consulting Services
Page 12 of 19

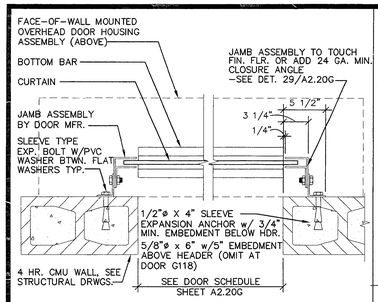

26 A2.20G RATED COILING DOOR JAMB UL 5493

1 1/2"=1'-0"

ESF_8073

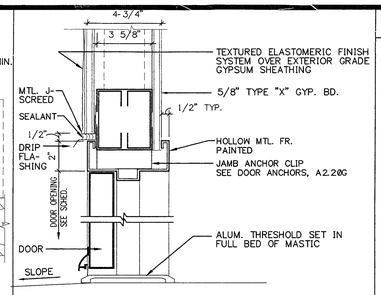

21 A2.20G HEAD (JAMB SIM.)

3"=1'-0"

ESF_9038

DOOR TYPES

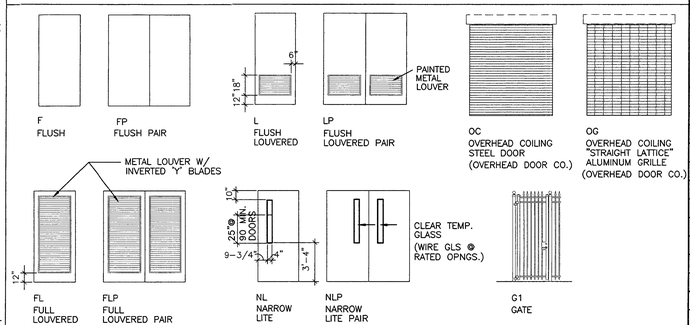

DOOR ANCHORS

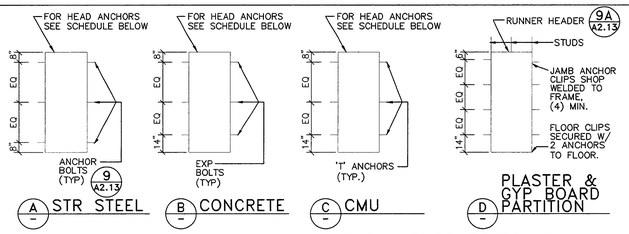

HEAD ANCHOR SCHEDULE

ANCHOR & SPREADER	DOOR OPENING
1. AT MID POINT	5' TO 6'
2. AT 1/2 POINTS	6' TO 7'
3. AT 1/4 POINTS	7' AND OVER

DOOR SCHEDULE - PARKING GARAGE

DOOR NO.	TYPE	DOORS OPENING W	DOORS OPENING HT	DOORS THICK	DOORS MAT'L	DOORS FINISH	DOORS SINGLE	DOORS PAIR	DOORS SOLID	DOORS HOLLOW	DOORS CLOSER	DOORS VISN PNL	DOORS OVERHEAD SERIES NO.	FRAMES MAT'L	FRAMES FINISH	FRAMES HEAD	FRAMES JAMB	FRAMES JAMB	FRAMES SILL	DWG. NO. DET. OCCURS	LABEL ASSEMBLY (MIN)	HARDWARE NO. SEE SPEC'S	NOTES
FIRST FLOOR - EXTERIOR																							
G101	FLP	8'-0"	VERIFY	1 3/4"	HM	P		●		●			–	HM	P	30	30	30	24	A2.20G	–	G1	FULL LOUVERED DOORS
G102	OC	12'-0"	9'-0"	-	STL	FF							610	STL	FF	26	27	27	29/12.20G	A2.05G	–	–	Q
GI03	G1	3'-0"	8'-0"	-	STL	FF	●				●		–	STL	FF	–	25	25		A2.06G	–	G10	EXIT GATE
G104	OG	15'-6"	8'-10"	-	SS	FF							671	STL	FF	3/48.02G	5	5	29	A2.20G	–	–	N, VERIFY OPNG.
G105	OG	25'-6"	9'-0"	-	SS	FF							671	STL	FF	–	10	10	29	A2.20G	–	–	Q, VERIFY OPNG.
G106	G1	3'-0"	8'-0"	-	STL	FF	●				●		–	STL	FF	–	25	25	–	A2.06G	–	G10	EXIT GATE
G137	OG	14'-0"	8'-8"	-	SS	FF							671	STL	FF	–	20	20	29	A2.20G	–	–	Q
G138	OG	27'-0"	9'-0"	-	SS	FF							671	STL	FF	–	20	20	29	A2.20G	–	–	Q
G139	OG	10'-0"	9'-0"	-	SS	FF							671	STL	FF	1/48.02G	15	15	29	A2.20G	–	–	Q
G140	G1	3'-0"	8'-0"	-	STL	FF	●				●		–	STL	FF	–	25	25	–	A2.06G	–	G10	GATE
FIRST FLOOR - INTERIOR																							
G107	F	3'-0"	6'-8"	1 3/4"	HM	P	●			●	●		–	HM	P	22	22	22	24	A2.20G	3-HR	G2	LOW CEILING
G108	NL	3'-0"	7'-0"	1 3/4"	HM	P	●			●	●	●	–	HM	P	22	22	22	24	A2.20G	–	G8	PREP FOR FUTURE CARD READER & ELECT. STRIKE
GI09	OC	6'-0"	8'-0"	-	STL	FF							630 OR 630 LABEL	STL	FF	27	26	26	29	A2.20G	3-HR	–	CC, Q
G110	OC	5'-4"	8'-0"	-	STL	FF							630 OR 630 LABEL	STL	FF	27	26	26	29	A2.20G	3-HR	–	CC, N
G111	F	3'-6"	7'-0"	1 3/4"	HM	P	●			●	●		–	HM	P	22	22	22	24	A2.20G	3-HR	G4	KICKPLATE PUSH SIDE
G112	FP	6'-0"	7'-0"	1 3/4"	HM	P		●		●	●		–	HM	P	22	22	22	24	A2.20G	1-HR	G5	KICKPLATE PUSH SIDE
G113	F	3'-6"	7'-0"	1 3/4"	HM	P	●			●			–	HM	P	22	22	22	24	A2.20G	–	G7	KICKPLATE PUSH SIDE
G114	F	3'-6"	7'-0"	1 3/4"	HM	P	●			●	●		–	HM	P	22	22	22	24	A2.20G	–	G3	PREP FOR FUTURE CARD READER & ELECT. STRIKE
G115	FL	3'-0"	7'-0"	1 3/4"	HM	P	●			●			–	HM	P	21	21	21	21	A2.20G	–	G7	
G116	FL	3'-0"	7'-0"	1 3/4"	HM	P	●			●	●		–	HM	P	22	22	22	24	A2.20G	–	G8	PREP FOR FUTURE CARD READER & ELECT. STRIKE
G117	OC	12'-0"	8'-0"	-	STL	FF							610	STL	FF	26	27	27	29/12.20G	A2.05G	–	–	Q
G118	OC	9'-5"	8'-0"	-	STL	FF							630 LABEL	STL	FF	28	26	26	29	A2.20G	1-HR	–	N
SECOND FLOOR																							
G201	F	3'-0"	7'-0"	1 3/4"	HM	P	●			●	●		–	HM	P	22	22	22	23	A2.20G	3-HR	G9	PREP FOR FUTURE CARD READER & ELECT. STRIKE
G202	L	3'-6"	7'-0"	1 3/4"	HM	P	●			●	●		–	HM	P	21	21	21	21	A2.20G	–	G6	
FOURTH FLOOR																							
G401	F	3'-0"	7'-0"	1 3/4"	HM	P	●			●	●		–	HM	P	22	22	22	23	A2.20G	3-HR	G9	PREP FOR FUTURE CARD READER & ELECT. STRIKE
G402	F	3'-0"	7'-0"	1 3/4"	HM	P	●			●	●		–	HM	P	22	22	22	23	A2.20G	3-HR	G9	PREP FOR FUTURE CARD READER & ELECT. STRIKE
FIFTH FLOOR																							
G501	F	3'-0"	7'-0"	1 3/4"	HM	P	●			●	●		–	HM	P	22	22	22	23	A2.20G	3-HR	G9	PREP FOR FUTURE CARD READER & ELECT. STRIKE
SEVENTH FLOOR																							
G701	G1	3'-0"	VERIFY	-	STL	FF	●				●		–	STL	FF	–	25	25	–	A2.06G	–	G10	EXIT GATE
G702	G1	3'-0"	VERIFY	-	STL	FF	●				●		–	STL	FF	–	25	25	–	A2.06G	–	G10	EXIT GATE
G703	G1	3'-0"	VERIFY	-	STL	FF	●				●		–	STL	FF	–	25	25	–	A2.06G	–	G10	EXIT GATE
G704	OG	25'-0"	9'-5"	-	SS	FF							671	STL	FF	–	–	–	29	A2.20G	–	–	Q

DOOR SCHEDULE MATERIAL and FINISH ABBREVIATIONS

AL	ALUMINUM	MTL	METAL
CC	PAINT CUSTOM COLOR SELECTED BY ARCHITECT	P	PAINT
		SS	STAINLESS STEEL
FF	FACTORY FINISH	STL	STEEL
HM	HOLLOW METAL	WD	WOOD

DOOR SCHEDULE GENERAL NOTES

A. ALL DOORS AT CORRIDOR SHALL HAVE GASKET AT HEAD AND BOTH JAMBS, EXIT DOORS SHALL BE OPENABLE FROM THE INSIDE WITHOUT THE USE OF A KEY OR ANY SPECIAL KNOWLEDGE OR EFFORT. MAXIMUM EFFORT TO OPERATE DOORS SHALL NOT EXCEED 8 1/2 lbs. FOR EXTERIOR DOORS AND 5 lbs. FOR INTERIOR DOORS.

B. ALL DOORS AT STAIR ENCLOSURES: THE MAXIMUM TRANSMITTED TEMPERATURE END POINT SHALL NOT EXCEED 450 DEG. "F" ABOVE AMBIENT AT THE END OF 30 MINUTES OF THE FIRE EXPOSURE SPECIFIED IN U.B.C. STANDARD 7-2 (U.B.C. 1009.3).

C. PROVIDE A 4" x 4" SELF ADHESIVE VINYL INTERNATIONAL SYMBOL OF ACCESSIBILITY (I.S.A.) CENTERED AT +60" A.F.F. AT EXTERIOR

D. FOR ADDITIONAL NOTES AND INFORMATION SEE FLOOR PLANS, DOOR AND THRESHOLD DETAILS.

E. SEE SPECIFICATIONS FOR ALL DOOR LEGENDS AND MATERIALS LISTED ABOVE

F. EXCEPT AT THE GROUND LEVEL AN APPROVED PICTORIAL SIGN OF A STANDARD DESIGN SHALL BE POSTED WITH EACH ELEVATOR CALL STATION WHICH SPECIFIES: "IN CASE OF FIRE DO NOT USE ELEVATOR – USE EXIT STAIRS".

G. ELEVATOR DOORS MUST BE CONSTRUCTED AND INSTALLED IN THE SAME MANNER AS A 1 1/2 HOUR FIRE ASSEMBLY, EVEN THOUGH ELEVATOR DOORS ARE NOT IDENTIFIED WITH FIRE LABELS.

H. PROVIDE STAIRWAY EXIT SIGNS. WORDS ON REQUIRED EXIT SIGNS SHALL BE IN BLOCK LETTERS 6" IN HEIGHT WITH A STROKE OF NOT LESS THAN 3/4".

J. GLASS AND GLAZING IN ALL EXTERIOR DOORS SHALL COMPLY WITH CHAPTER 24 OF THE U.B.C. AND SECTION 2406 SAFETY GLAZING.

K. GLAZING:
- GLASS VIEW PANELS IN 20 OR 45 MIN. DOOR/FRAME ASSEMBLIES ARE NOT TO EXCEED 1296 SQ. IN.
- GLASS VIEW PANELS IN 90 MIN. DOOR/FRAME ASSEMBLIES NOT TO EXCEED 100 SQ. IN.
- INSTALL BAROQUE PATTERN 1/4" WIRE GLASS, TYP.
- GLASS FRAMES TO BE PAINTED TO MATCH COLOR OF DOORS

L. PROVIDE WALL BACKING AT ALL DOORS AND HOLD OPENS, TYPICAL, SEE DETAIL.

M. SEE DOOR ANCHOR LEGEND, THIS SHEET, FOR TYPICAL DOOR ANCHOR LOCATIONS.

N. "RDB" DOOR OPERATOR, FRONT OF HOOD MOUNTED ON RIGHT SIDE OF DOOR. (OVERHEAD DOOR MFR.)

Q. "RDB" DOOR OPERATOR, FRONT OF HOOD MOUNTED ON LEFT SIDE OF DOOR. (OVERHEAD DOOR MFR.)

PLANS REVIEWED BY
Precision Inspection Company
Inspection and Consulting Services
Page 12 Of 14

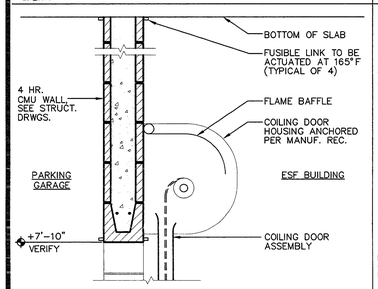

27 A2.20G RATED COILING DOOR HEAD UL 5493

1"=1'-0"

ESF_8039

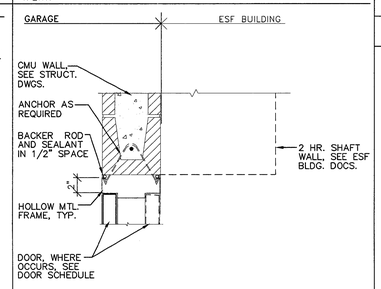

22 A2.20G DOOR HEAD @ CMU WALL JAMB SIM.

1-1/2"=1'-0"

ESF_9035

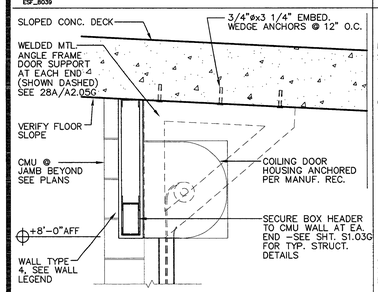

28 A2.20G RATED COILING DOOR HEAD

1"=1'-0"

ESF_8074

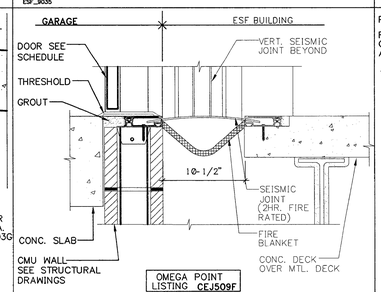

23 A2.20G EXPANSION JOINT @ SILL

1 1/2"=1'-0"

ESF_9037

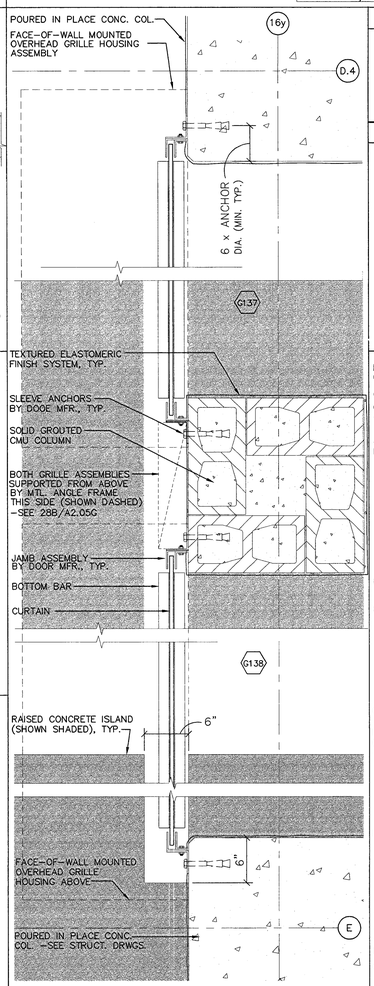

20 A2.20G COILING GRILLE JAMB

1 1/2"=1'-0"

ESF_8077

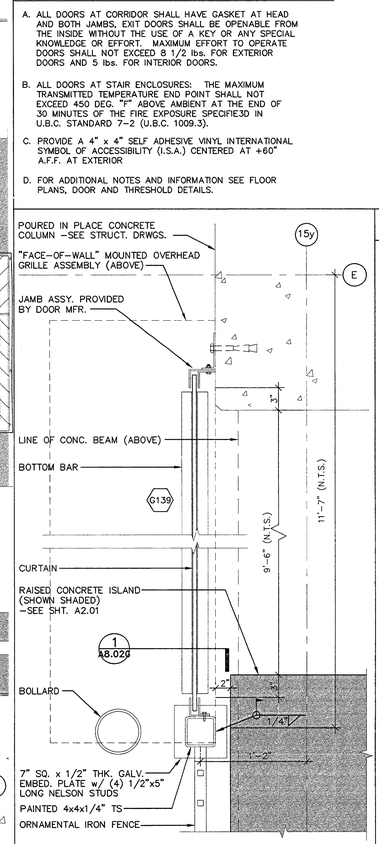

15 A2.20G COILING GRILLE JAMB

1 1/2"=1'-0"

ESF_8075

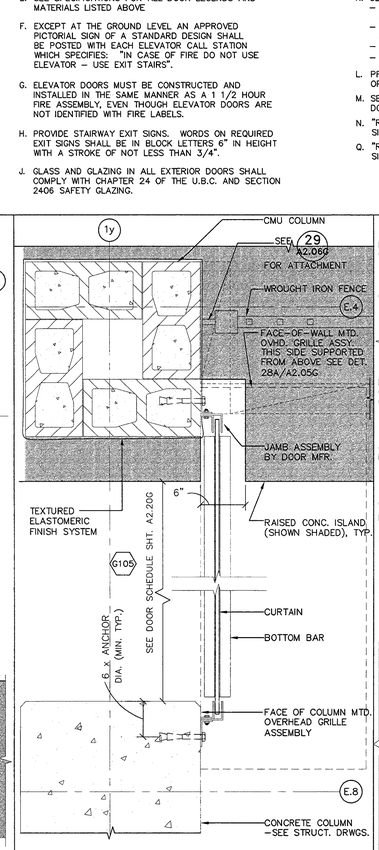

10 A2.20G COILING GRILLE JAMB

1 1/2"=1'-0"

ESF_8076

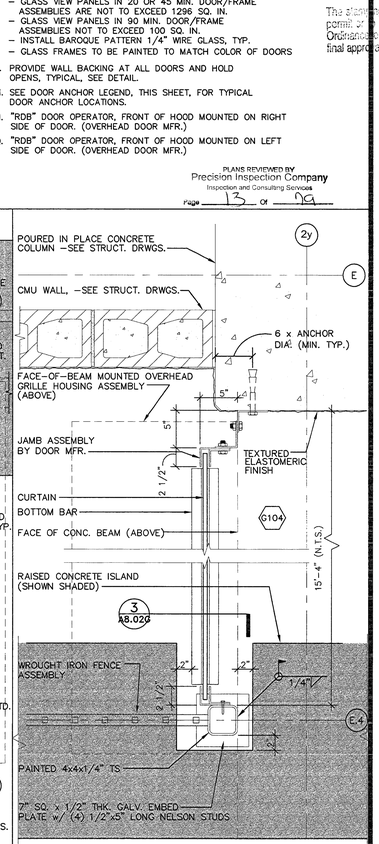

5 A2.20G COILING GRILLE JAMB

1 1/2"=1'-0"

ESF_8072

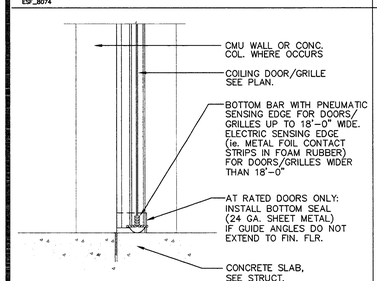

29 A2.20G COILING DOOR/GRILLE SILL

1"=1'-0"

ESF_8029

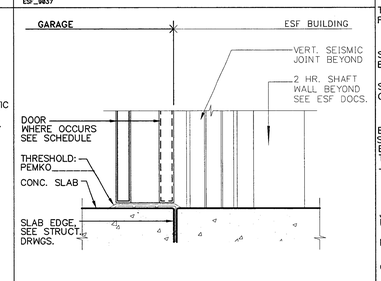

24 A2.20G THRESHOLD

1 1/2"=1'-0"

ESF_9076

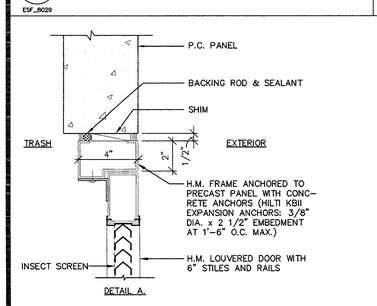

30 A2.20G DOOR HEAD (JAMB SIM.)

3"=1'-0"

ESF_8059

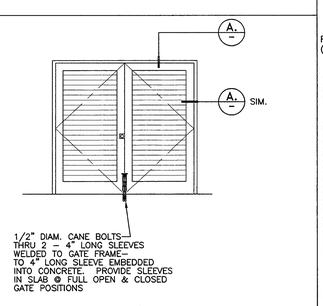

30 A2.20G DOOR HEAD (JAMB SIM.)

3"=1'-0"

ESF_8059

ENGLISH HARPER RETA
ARCHITECTS

580 UNIVERSITY AVENUE SUITE 100
SACRAMENTO, CA 95825 (916) 568-1821

THIS DRAWING IS NOT FINAL OR TO BE USED FOR CONSTRUCTION UNTIL IT IS SIGNED BY THE ARCHITECT AND THE OWNER.

ARCHITECT
EDWARD P. ENGLISH C-10399
RICHARD L. HARPER C-13830
RONALD A. RETA C- 9879

OWNER

CONTRACTOR

LICENSED ARCHITECT RONALD A. RETA No. C-9879 REN. 3-31-01 STATE OF CALIFORNIA

Turner Construction Company

This set of plans and specifications MUST be kept on the job at all times with the building permit and is available for public inspection after work is completed. City of Stockton Ordinance Law. Changes or additions to the approved plans must be approved by the final approval.

By

The granting of this permit or approval of plans, specifications and computations shall not be construed to be a permit for, or an approval of, any violation of any of the provisions of the City of Stockton Ordinance Law. Changes or additions to the approved plans must be approved by the final approval.

OFFICE COPY

Essential Services Facility (UNDER SEPARATE DOCUMENT PACKAGE)

Parking Garage

KEY PLAN

DATE	NO.	DESCRIPTION
1-13-2000	3	OVERALL PERMIT SET
11-15-99	2	OVERALL PLAN CHECK SET
10-18-99	1	PROGRESS SET

REVISIONS
DRAWN BY
CHECKED BY

Parking Garage
15 North El Dorado Street, Stockton, California
PROGRESS PRINT

DRAWING

DOOR SCHEDULE

PROJECT NO. 98113
DRAWING NO. A2.20G
CADFILE A2_20G
DATE 7 SEPTEMBER 1999

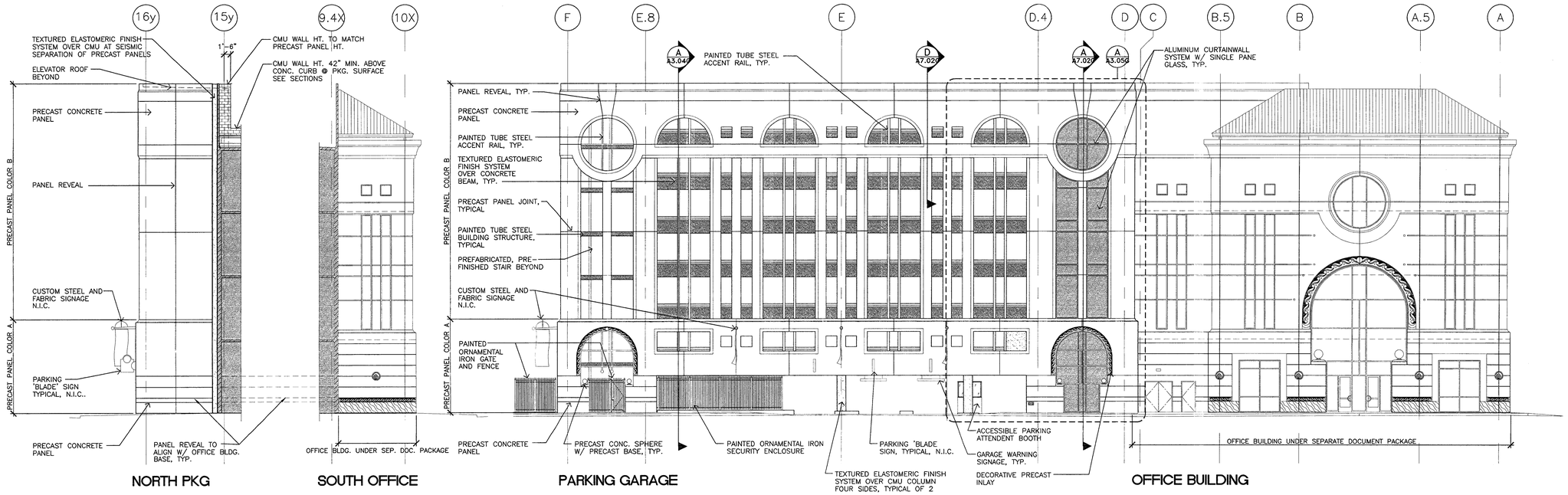

EAST ELEVATION
SCALE:3/32"=1'-0"

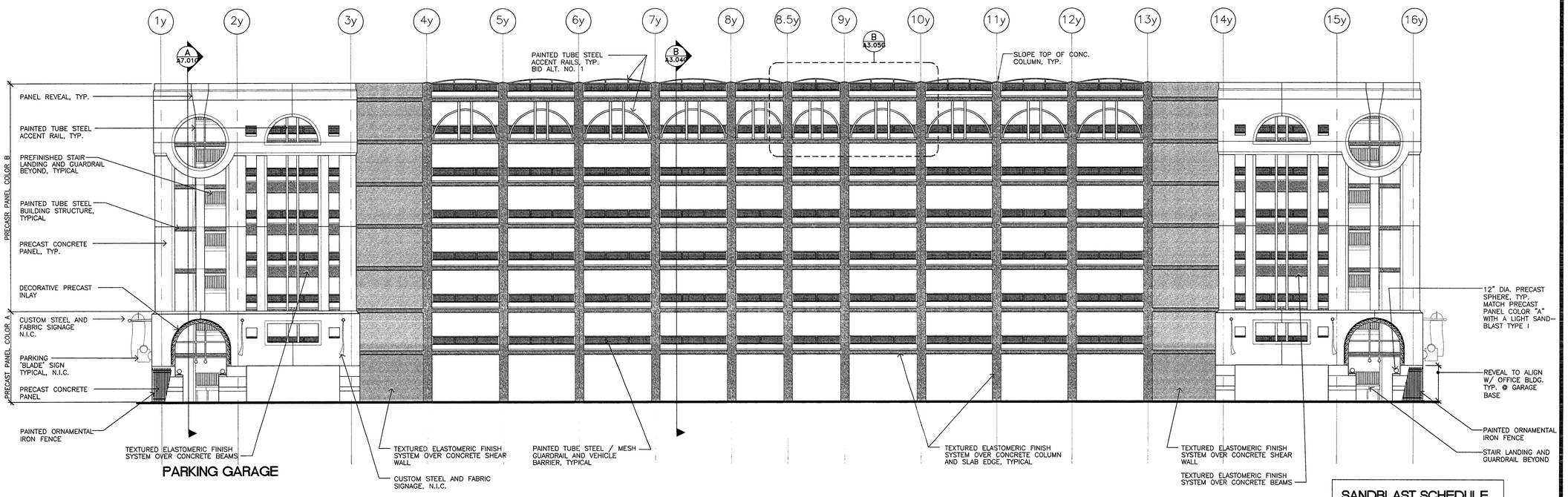

SOUTH ELEVATION
SCALE:3/32"=1'-0"

SANDBLAST SCHEDULE

TYPE I	LIGHT SANDBLAST
TYPE II	MEDIUM SANDBLAST

NOTE:
1. TYPE II SANDBLAST U.N.O.

PLANS REVIEWED BY
Precision Inspection Company
Inspection and Consulting Services
Page ___ Of ___

ENGLISH HARPER RETA
ARCHITECTS

580 UNIVERSITY AVENUE SUITE 100
SACRAMENTO, CA 95825 (916) 568-1821

THIS DRAWING IS NOT FINAL OR TO BE USED FOR CONSTRUCTION UNTIL IT IS SIGNED BY THE ARCHITECT AND THE OWNER.

ARCHITECT
EDWARD P. ENGLISH C-10399
RICHARD L. HARPER C-13830
RONALD A. RETA C- 9879

OWNER

CONTRACTOR

REGISTERED ARCHITECT RONALD A. RETA No. C-9879 REN. 3-31-01 STATE OF CALIFORNIA

Turner Construction Company

This set of plans and specifications MUST be kept on the job at all times and it is unlawful for any person to make changes or alterations on same without written permission from the Building Official, City of Stockton.
APPROVED
By ___
The issuance of this permit or approval of plans does not permit or be an approval of any violation of any provisions of any City Ordinance or State Law. Occupancy of structure shall not be allowed prior to final approval.

CONFORMED COPY

Essential Services Facility (UNDER SEPARATE DOCUMENT PACKAGE)
Parking Garage

KEY PLAN

DATE	NO.	DESCRIPTION
1-13-2000	3	OVERALL PERMIT SET
11-15-99	2	OVERALL PLAN CHECK SET
10-18-99	1	PROGRESS SET

REVISIONS
DRAWN BY JMM
CHECKED BY BH

Parking Garage
15 North El Dorado Street, Stockton, California
PROGRESS PRINT

DRAWING
PARKING GARAGE ELEVATIONS

PROJECT NO. 98113
DRAWING NO. A3.01G
CADFILE A3_01G
DATE 7 SEPTEMBER 1999

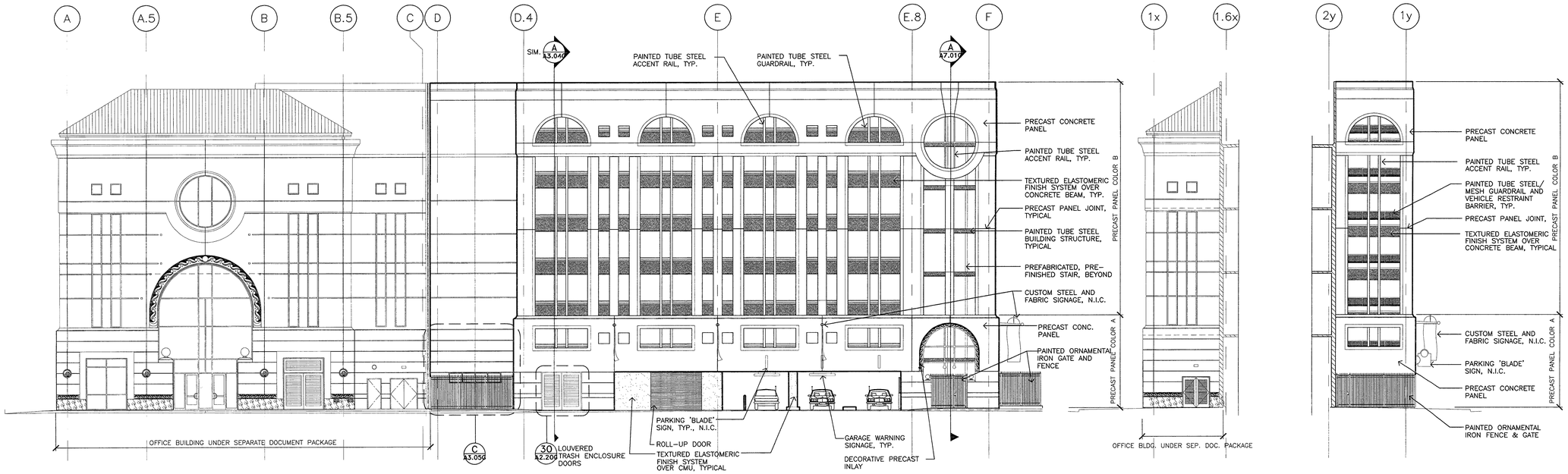

OFFICE BUILDING | PARKING GARAGE | SOUTH OFFICE | NORTH PKG

WEST ELEVATION

SCALE:3/32"=1'-0"

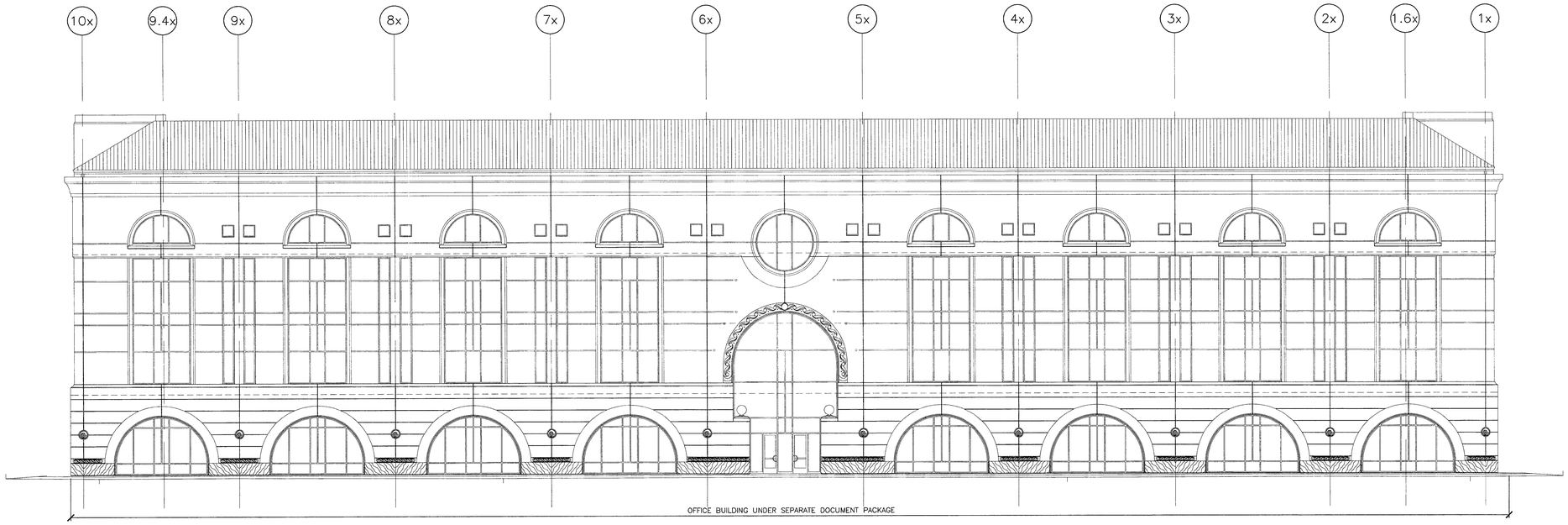

NORTH ELEVATION

SCALE:3/32"=1'-0"

PLANS REVIEWED BY
Precision Inspection Company
Inspection and Consulting Services
Page 15 of 154

ENGLISH HARPER RETA
ARCHITECTS

580 UNIVERSITY AVENUE SUITE 100
SACRAMENTO, CA 95825 (916) 568-1821

THIS DRAWING IS NOT FINAL OR TO BE USED FOR CONSTRUCTION UNTIL IT IS SIGNED BY THE ARCHITECT AND THE OWNER.

ARCHITECT
EDWARD P. ENGLISH C-10399
RICHARD L. HARPER C-13830
RONALD A. RETA C- 9879

OWNER

CONTRACTOR

LICENSED ARCHITECT RONALD A. RETA REN. 3-31-01 STATE OF CALIFORNIA

Turner Construction Company

This set of plans and specifications MUST be kept on the job at all times and it is unlawful to make any changes or alterations on same without written permission from the Building Inspection, City of Stockton.
APPROVED
By

The stamping of this plan and specification shall not be held to permit or to be an approval of the violation of any provisions of any City Ordinance or State Law. Occupancy of structure shall not be given until final approval.

UNCONTROLLED COPY

Essential Services Facility
(UNDER SEPARATE DOCUMENT PACKAGE)
Parking Garage

KEY PLAN

DATE	NO.	DESCRIPTION
1-13-2000	3	OVERALL PERMIT SET
11-15-99	2	OVERALL PLAN CHECK SET
10-18-99	1	PROGRESS SET

REVISIONS

DRAWN BY
JMM

CHECKED BY
BH

Parking Garage
15 North El Dorado Street, Stockton, California
PROGRESS PRINT

DRAWING
PARKING GARAGE ELEVATION

PROJECT NO. 98113
DRAWING NO. A3.02G
CADFILE A3_02G
DATE 7 SEPTEMBER 1999

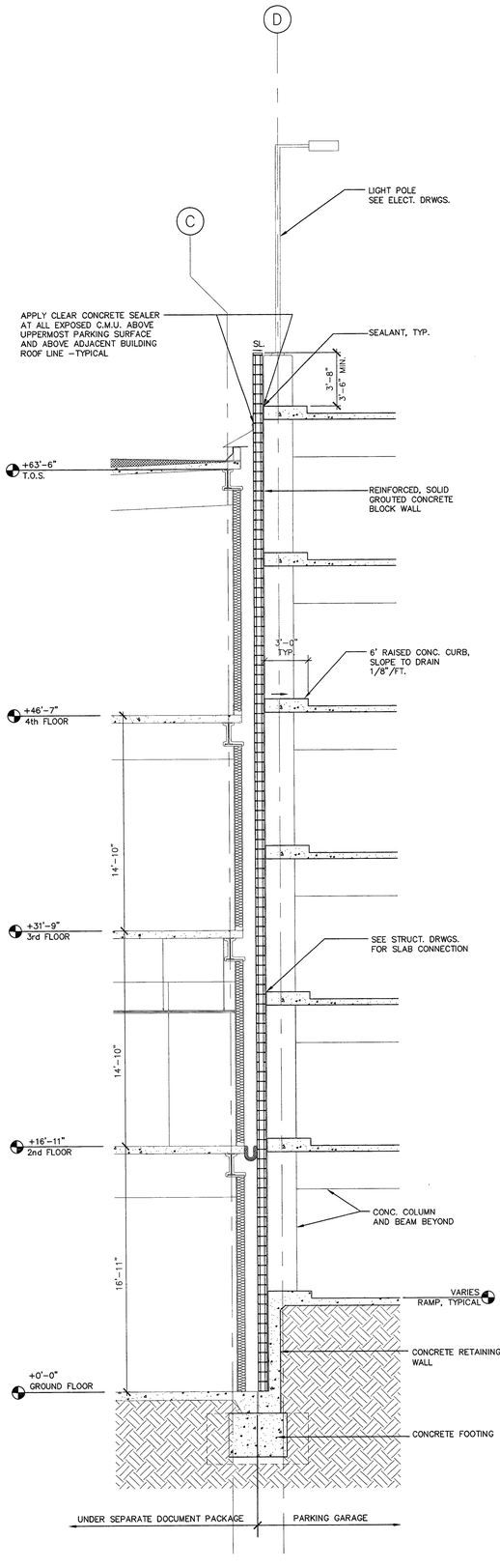

D A3.03G
WALL SECTION
1/4"=1'-0"
BSEC_01B

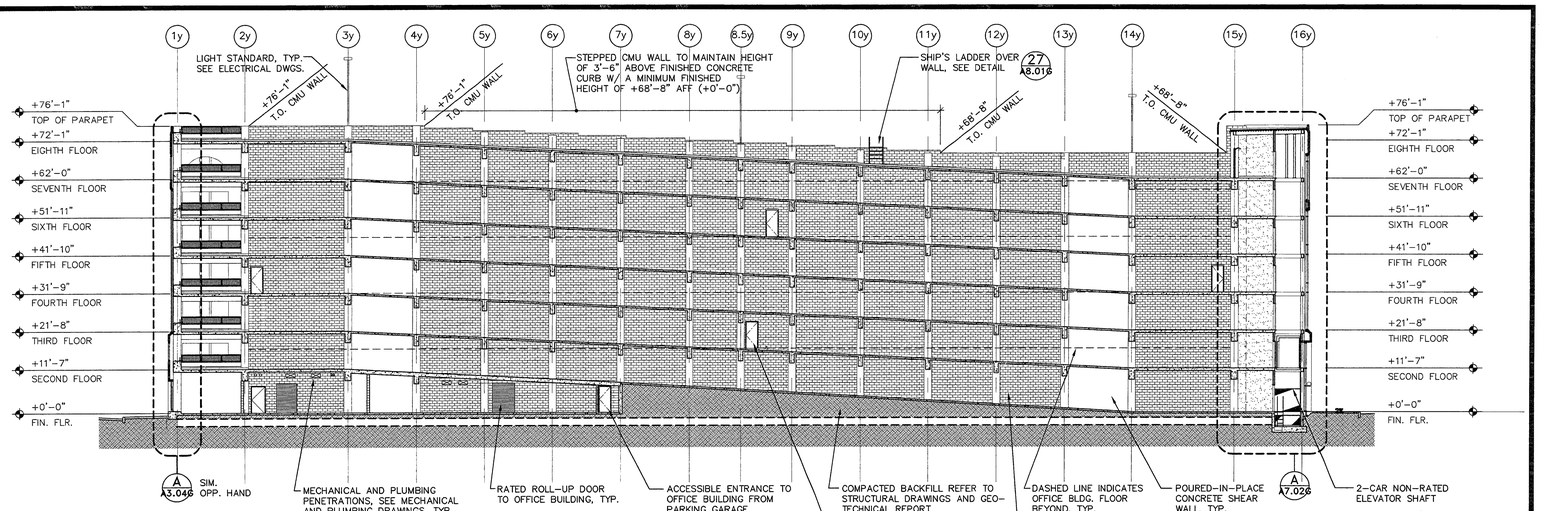

A A3.03
PARKING GARAGE BUILDING SECTION
1/16"=1'-0"
BSEC_03G

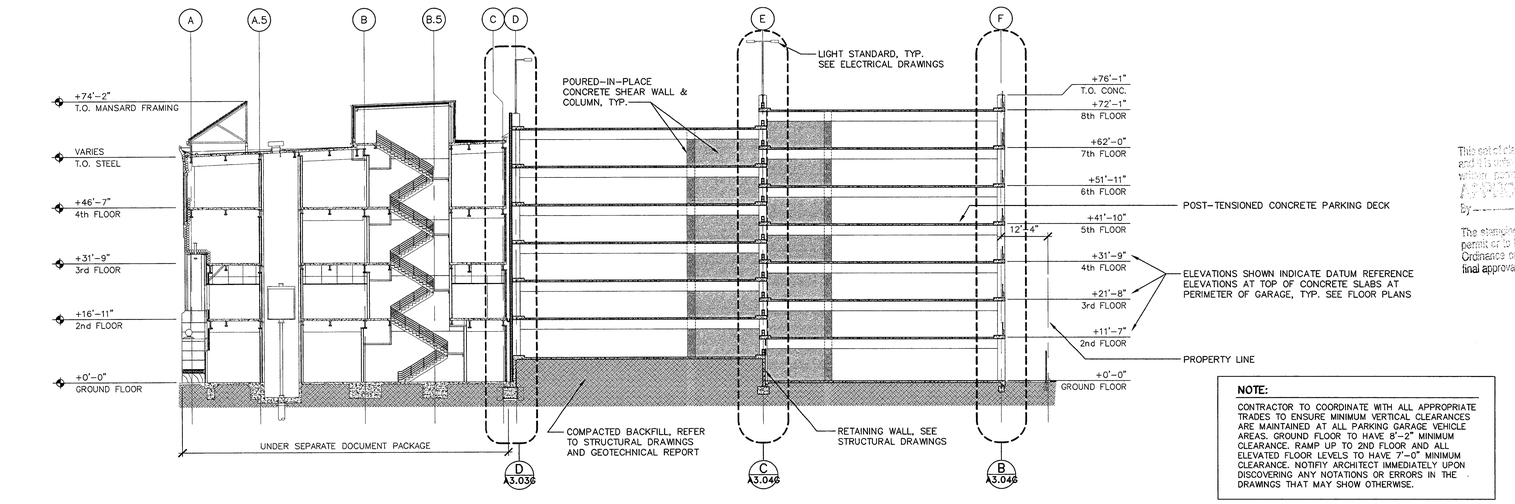

NOTE:
CONTRACTOR TO COORDINATE WITH ALL APPROPRIATE TRADES TO ENSURE MINIMUM VERTICAL CLEARANCES ARE MAINTAINED AT ALL PARKING GARAGE VEHICLE AREAS. GROUND FLOOR TO HAVE 8'-2" MINIMUM CLEARANCE. RAMP UP TO 2ND FLOOR AND ALL ELEVATED FLOOR LEVELS TO HAVE 7'-0" MINIMUM CLEARANCE. NOTIFY ARCHITECT IMMEDIATELY UPON DISCOVERING ANY NOTATIONS OR ERRORS IN THE DRAWINGS THAT MAY SHOW OTHERWISE.

B A3.03G
OFFICE BUILDING / PARKING GARAGE BUILDING SECTION
1/16"=1'-0"
BSEC_02G

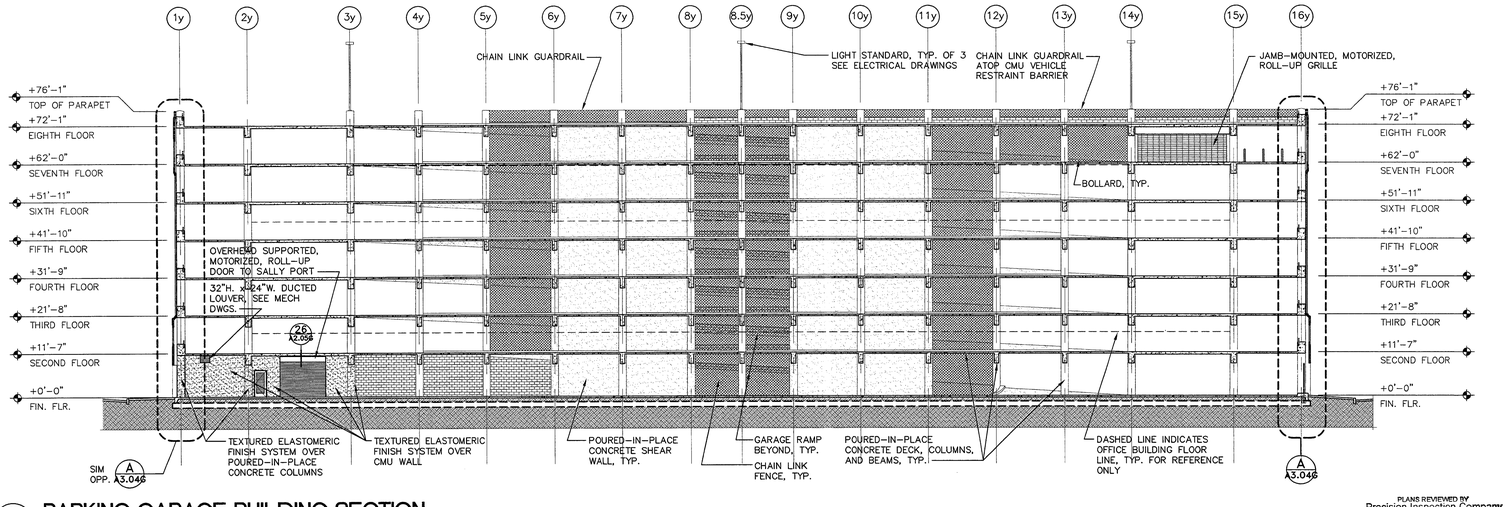

C A3.03G
PARKING GARAGE BUILDING SECTION
1/16"=1'-0"
BSEC_04G

PLANS REVIEWED BY
Precision Inspection Company
Inspection and Consulting Services
Page 10 Of 19

ENGLISH HARPER RETA
ARCHITECTS

580 UNIVERSITY AVENUE SUITE 100
SACRAMENTO, CA 95825 (916) 568-1821

THIS DRAWING IS NOT FINAL OR TO BE USED FOR CONSTRUCTION UNTIL IT IS SIGNED BY THE ARCHITECT AND THE OWNER.

ARCHITECT
EDWARD P. ENGLISH C-10399
RICHARD L. HARPER C-13830
RONALD A. RETA C- 9879

OWNER

CONTRACTOR

REGISTERED ARCHITECT RONALD A. RETA No. C-9879 EXP. 3-31-01 STATE OF CALIFORNIA

Turner Construction Company

This set of plans and specifications MUST be kept on the job at all times and it is unlawful to make any changes or alterations on same without written permission from the Building Official, City of Stockton.
APPROVED
By
The stamping of these plans and specifications shall not be held to permit or to be an approval of the violation of any provisions of any City Ordinance or State Law. Stamping does not constitute final approval.

OFFICIAL COPY

Essential Services Facility
(UNDER SEPARATE DOCUMENT PACKAGE)
Parking Garage

KEY PLAN

DATE	NO.	DESCRIPTION
1-13-2000	3	OVERALL PERMIT SET
11-15-99	2	OVERALL PLAN CHECK SET
10-18-99	1	PROGRESS SET

REVISIONS
DRAWN BY JMM
CHECKED BY BH

Parking Garage
15 North El Dorado Street, Stockton, California
PROGRESS PRINT

DRAWING
PARKING GARAGE SECTIONS

PROJECT NO. 98113
DRAWING NO. A3.03G
CADFILE A3_03G
DATE 7 SEPTEMBER 1999

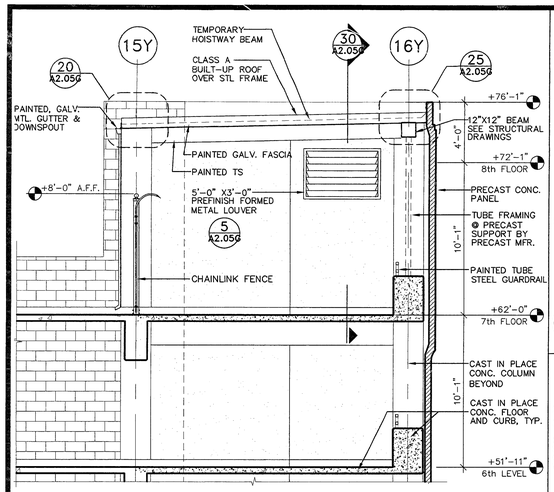

D A3.04G — **SECTION** 1/4"=1'-0"

WSEC_15

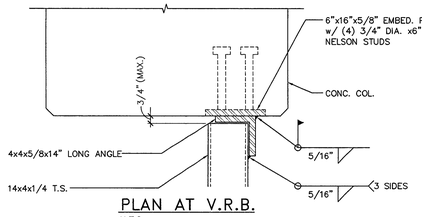

PLAN AT V.R.B.
N.T.S.

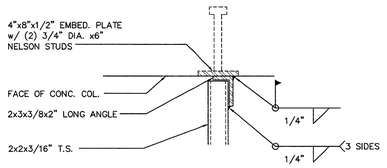

PLAN AT HANDRAIL
N.T.S.

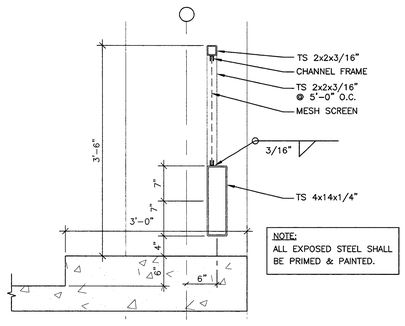

29 A3.04G — **VEHICLE RESTRAINT BARRIER** 1"=1'-0"

BSEC_01B

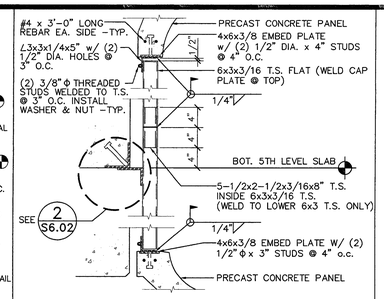

21 A3.04 — **EXT. STEEL CONNECTIONS** 1"=1'-0"

ESF_9105

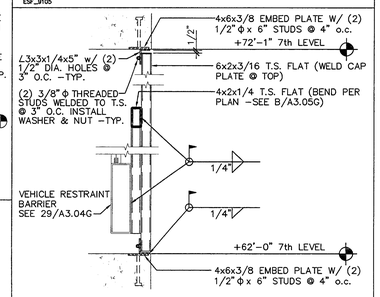

22 A3.04 — **EXT. STEEL CONNECTIONS** 1"=1'-0"

ESF_9106

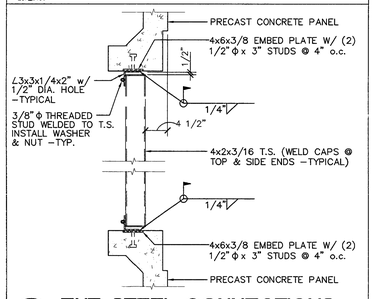

23 A3.04 — **EXT. STEEL CONNECTIONS** 1"=1'-0"

ESF_9107

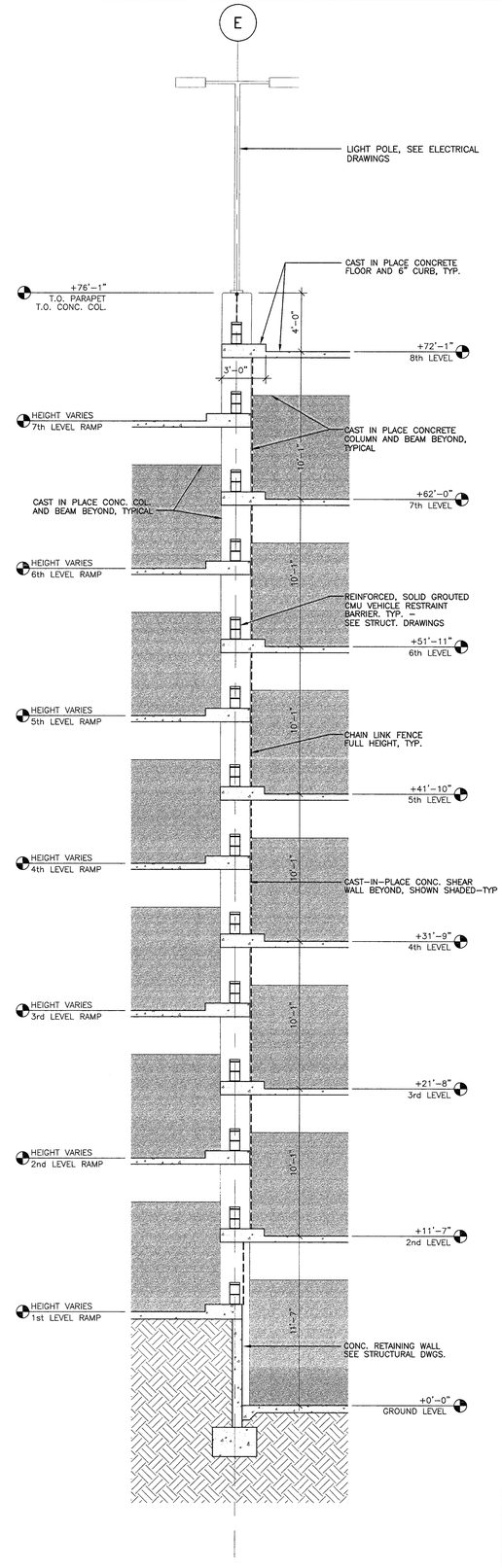

C A3.04G — **WALL SECTION** 1/4"=1'-0"

BSEC_01B

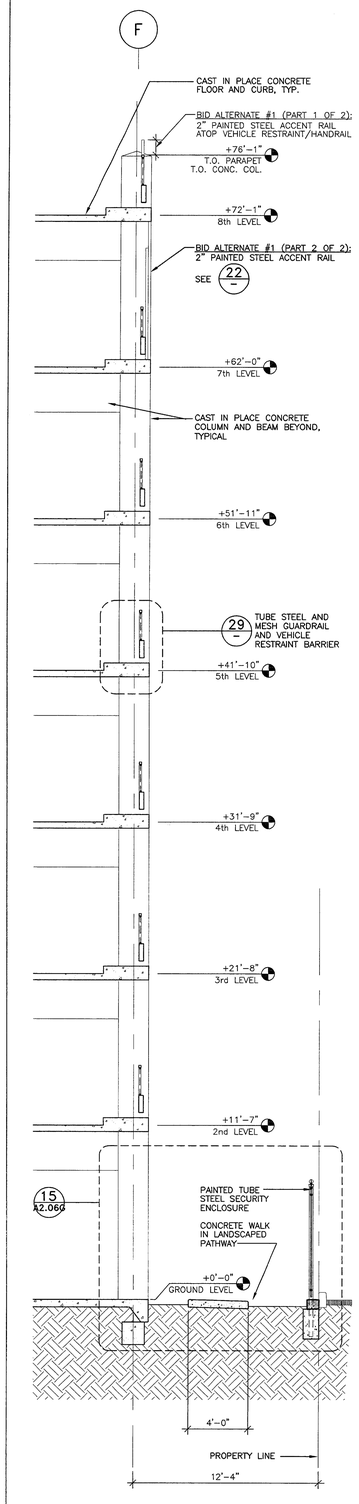

B A3.04G — **WALL SECTION** 1/4"=1'-0"

BSEC_01B

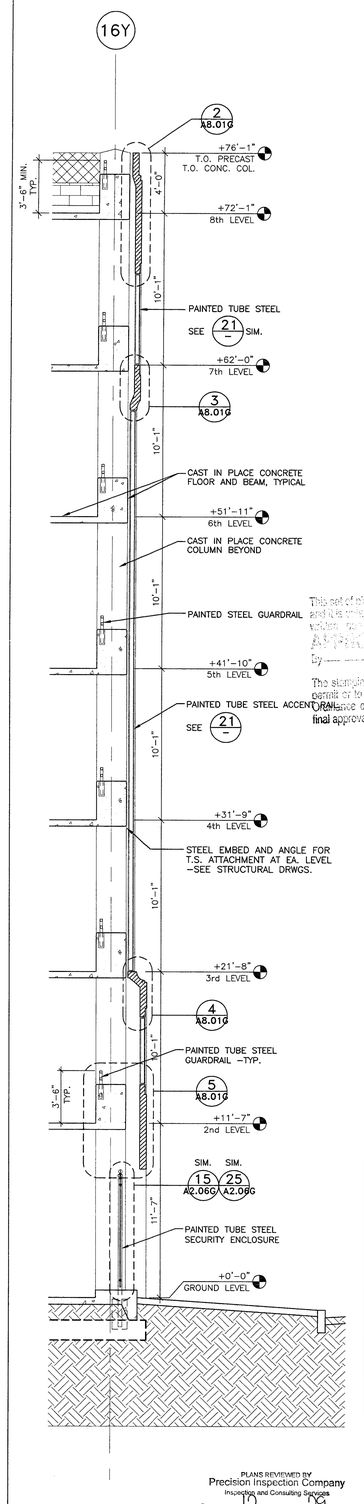

PLANS REVIEWED BY
Precision Inspection Company
Inspection and Consulting Services
Page ___ Of ___

A A3.04G — **WALL SECTION** 1/4"=1'-0"

BSEC_04G

ENGLISH HARPER RETA
ARCHITECTS

580 UNIVERSITY AVENUE SUITE 100
SACRAMENTO, CA 95825 (916) 568-1821

THIS DRAWING IS NOT FINAL OR TO BE USED FOR CONSTRUCTION UNTIL IT IS SIGNED BY THE ARCHITECT AND THE OWNER.

ARCHITECT
EDWARD P. ENGLISH C-10399
RICHARD L. HARPER C-13830
RONALD A. RETA C- 9879

OWNER

CONTRACTOR

LICENSED ARCHITECT RICHARD L. HARPER No. C-13830 REN. 3-31-01 STATE OF CALIFORNIA

Turner Construction Company

This set of plans and specifications MUST be kept on the job at all times and is not to be used for any purpose or alterations on same without written authorization of the Building Official, City of Stockton.
By ___ Date ___
This stamp does not relieve applicant of responsibility to obtain any permit or to comply with any provision of any law, ordinance or regulation. Occupancy may not be granted until final approval.

OFFICIAL COPY

Essential Services Facility
(UNDER SEPARATE DOCUMENT PACKAGE)

Parking Garage

KEY PLAN

DATE	NO.	DESCRIPTION
1-13-2000	3	OVERALL PERMIT SET
11-15-99	2	OVERALL PLAN CHECK SET
10-18-99	1	PROGRESS SET

REVISIONS
DRAWN BY JM
CHECKED BY

Parking Garage
15 North El Dorado Street, Stockton, California
PROGRESS PRINT

DRAWING
WALL SECTIONS

PROJECT NO. 98113
DRAWING NO. A3.04G
CADFILE A3_04G
DATE 7 SEPTEMBER 1999

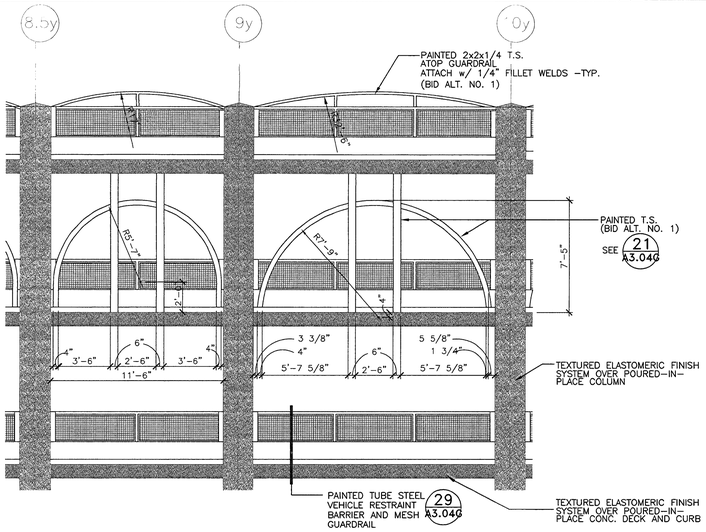

B A3.05G XXXXEDXX
ENLARGED PARTIAL SOUTH ELEVATIONS
1/4"=1'-0"

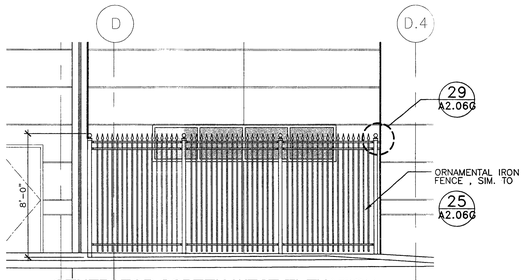

GENERATOR SCREEN WEST ELEVATION

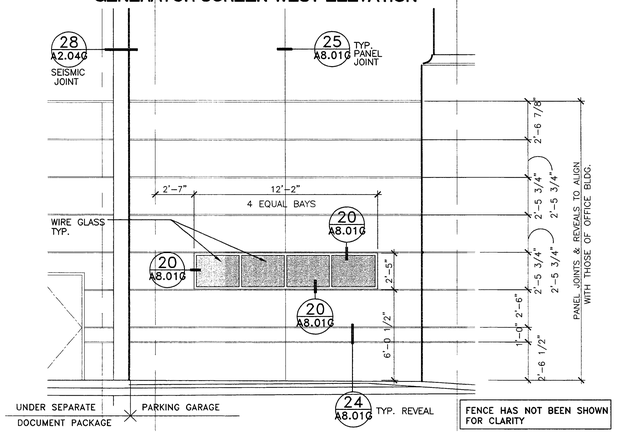

C A3.05G XXXXEDXX
ENLARGED PARTIAL WEST ELEVATION
1/4"=1'-0"

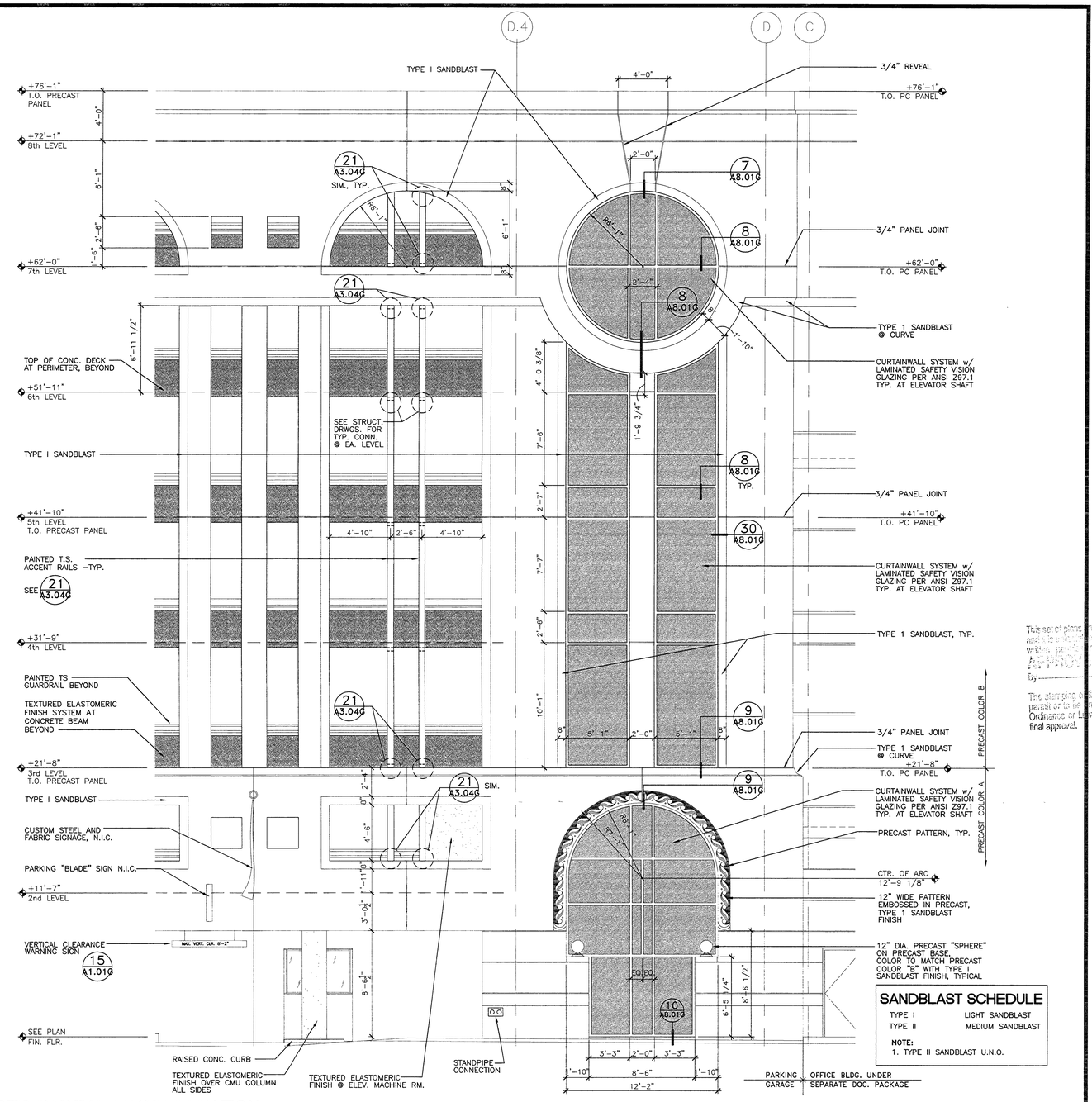

SANDBLAST SCHEDULE	
TYPE I	LIGHT SANDBLAST
TYPE II	MEDIUM SANDBLAST

NOTE:
1. TYPE II SANDBLAST U.N.O.

A A3.05G A_EEE
ENLARGED PARTIAL EAST ELEVATION
1/4"=1'-0"

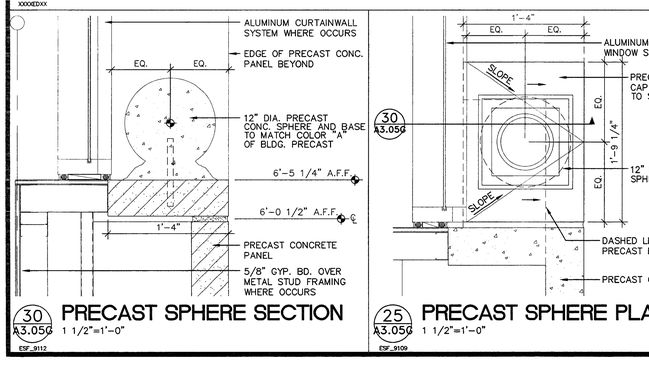

30 A3.05G
PRECAST SPHERE SECTION
1 1/2"=1'-0"

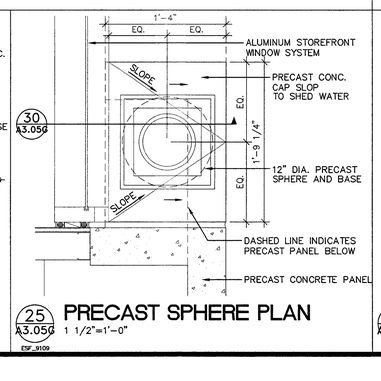

25 A3.05G
PRECAST SPHERE PLAN
1 1/2"=1'-0"

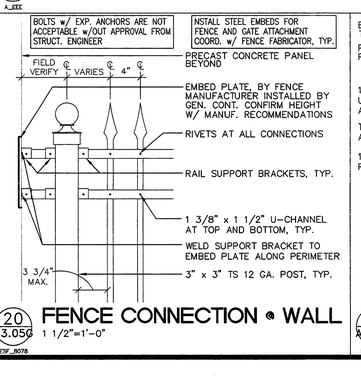

20 A3.05G
FENCE CONNECTION @ WALL
1 1/2"=1'-0"

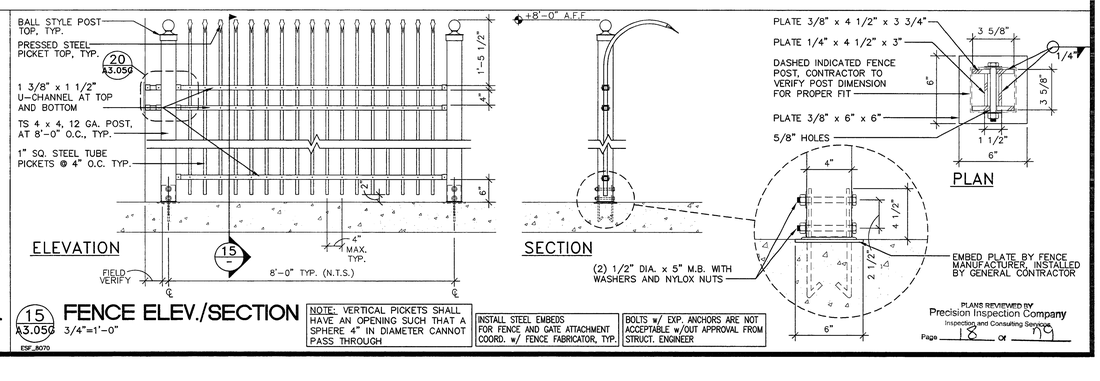

15 A3.05G
FENCE ELEV./SECTION
3/4"=1'-0"

NOTE: VERTICAL PICKETS SHALL HAVE AN OPENING SUCH THAT A SPHERE 4" IN DIAMETER CANNOT PASS THROUGH

INSTALL STEEL EMBEDS FOR FENCE AND GATE ATTACHMENT COORD. w/ FENCE FABRICATOR, TYP.

BOLTS w/ EXP. ANCHORS ARE NOT ACCEPTABLE w/OUT APPROVAL FROM STRUCT. ENGINEER

PLANS REVIEWED BY Precision Inspection Company
Inspection and Consulting Services
Page 18 OF 19

ENGLISH HARPER RETA
ARCHITECTS

580 UNIVERSITY AVENUE SUITE 100
SACRAMENTO, CA 95825 (916) 568-1821

THIS DRAWING IS NOT FINAL OR TO BE USED FOR CONSTRUCTION UNTIL IT IS SIGNED BY THE ARCHITECT AND THE OWNER.

ARCHITECT
EDWARD P. ENGLISH C-10399
RICHARD L. HARPER C-13830
RONALD A. RETA C- 9879

OWNER

CONTRACTOR

LICENSED ARCHITECT RICHARD L. HARPER No. C-13830 EXPIRES 3-31-01 STATE OF CALIFORNIA

Turner Construction Company

This set of plans and specifications MUST be kept on the job at all times with the stamp of approval affixed. It is unlawful to make changes or alterations on plans without written permission from the Building Inspection Dept. of Stockton.
By _____

The starting of construction work authorized by this permit or the occupancy of buildings prior to final approval is in violation of the Ordinances of the City of Stockton.

OFFICE COPY

Essential Services Facility (UNDER SEPARATE DOCUMENT PACKAGE)

Parking Garage

KEY PLAN

DATE	NO.	DESCRIPTION
1-13-2000	3	OVERALL PERMIT SET
11-15-99	2	OVERALL PLAN CHECK SET
10-18-99	1	PROGRESS SET

REVISIONS
DRAWN BY JMM
CHECKED BY BH

Parking Garage
15 North El Dorado Street, Stockton, California
PROGRESS PRINT

DRAWING
PARKING GARAGE ENLARGED PARTIAL ELEVATIONS

PROJECT NO. 98113
DRAWING NO. A3.05G
CADFILE A3_05G
DATE 7 SEPTEMBER 1999

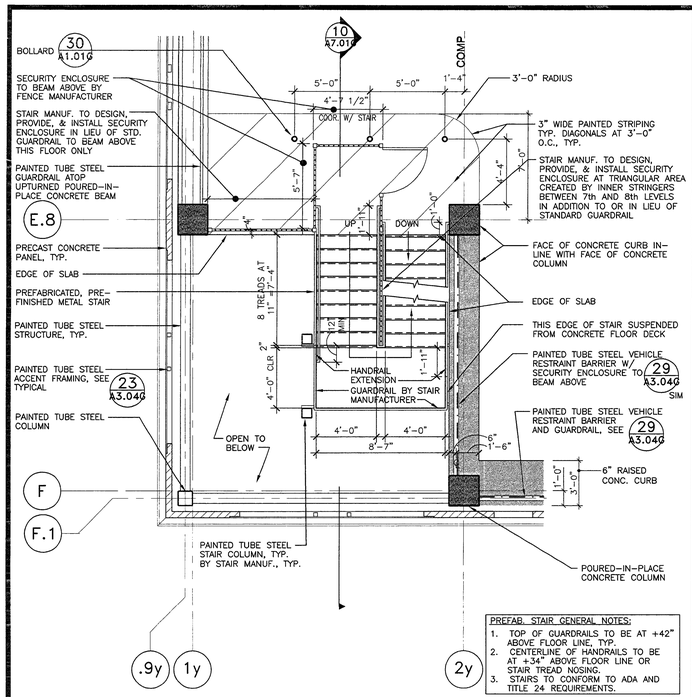

PREFAB. STAIR GENERAL NOTES:
1. TOP OF GUARDRAILS TO BE AT +42" ABOVE FLOOR LINE, TYP.
2. CENTERLINE OF HANDRAILS TO BE AT +34" ABOVE FLOOR LINE OR STAIR TREAD NOSING.
3. STAIRS TO CONFORM TO ADA AND TITLE 24 REQUIREMENTS.

17 A7.01G SEVENTH LEVEL STAIR
1/4"=1'-0"

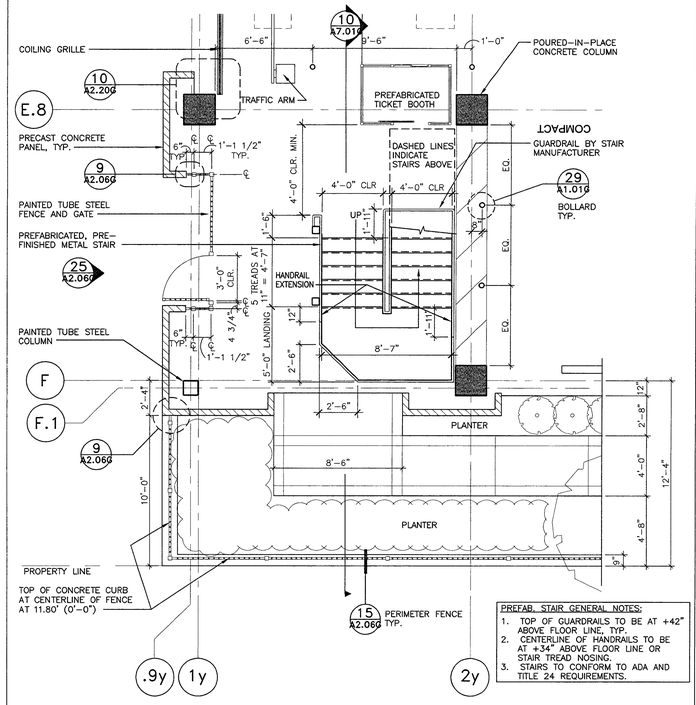

PREFAB. STAIR GENERAL NOTES:
1. TOP OF GUARDRAILS TO BE AT +42" ABOVE FLOOR LINE, TYP.
2. CENTERLINE OF HANDRAILS TO BE AT +34" ABOVE FLOOR LINE OR STAIR TREAD NOSING.
3. STAIRS TO CONFORM TO ADA AND TITLE 24 REQUIREMENTS.

12 A7.01G FIRST LEVEL STAIR
1/4"=1'-0"

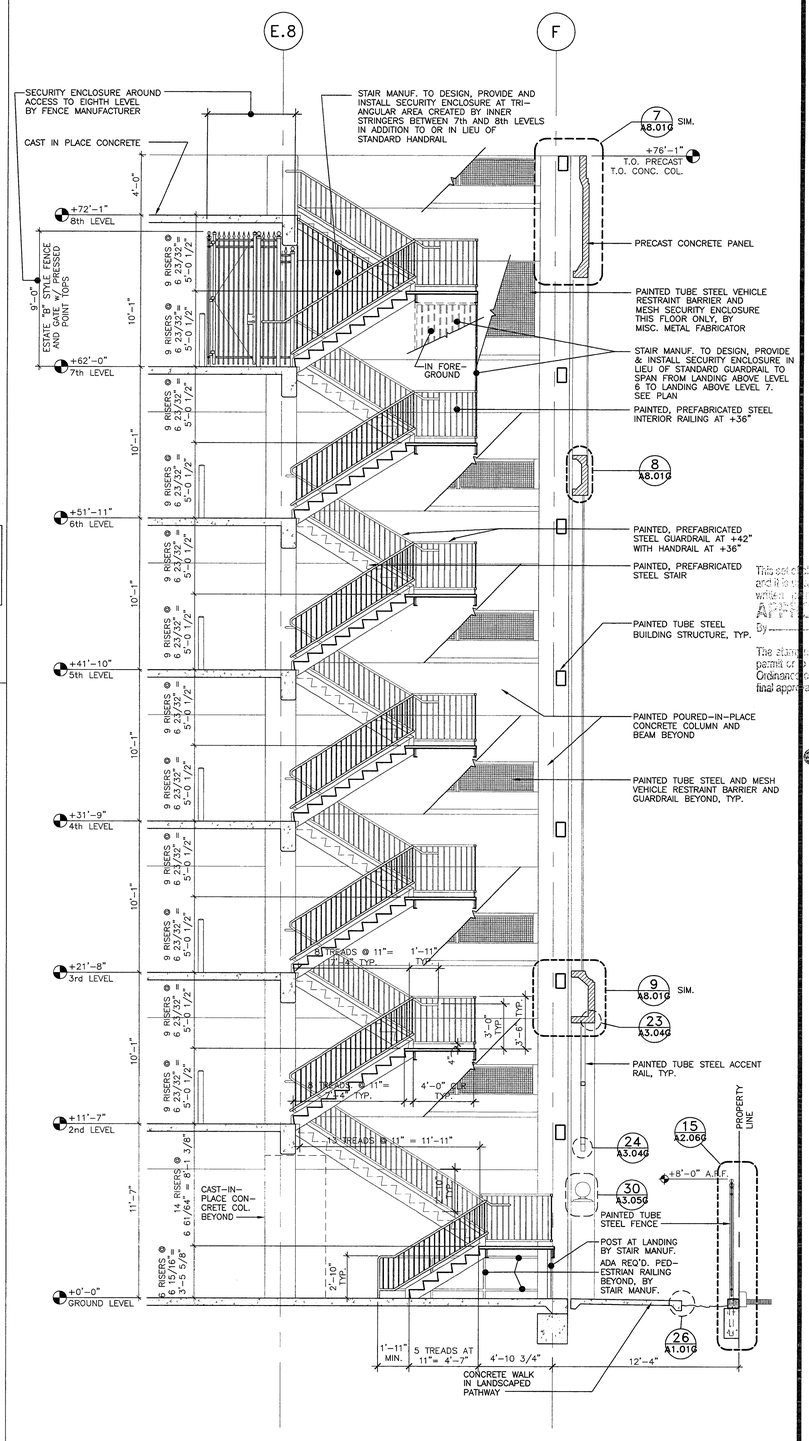

10 A7.01G WALL/STAIR SECTION
1/4"=1'-0"

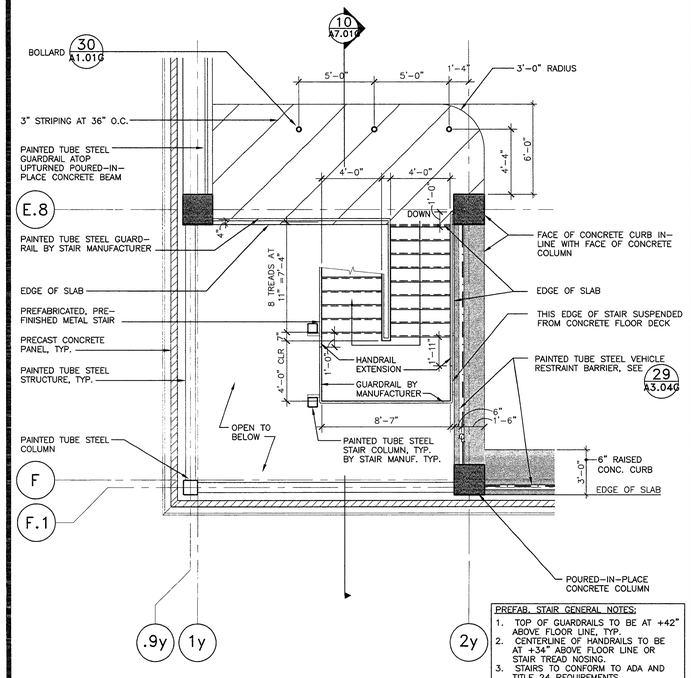

PREFAB. STAIR GENERAL NOTES:
1. TOP OF GUARDRAILS TO BE AT +42" ABOVE FLOOR LINE, TYP.
2. CENTERLINE OF HANDRAILS TO BE AT +34" ABOVE FLOOR LINE OR STAIR TREAD NOSING.
3. STAIRS TO CONFORM TO ADA AND TITLE 24 REQUIREMENTS.

19 A7.01G EIGHTH LEVEL STAIR
1/4"=1'-0"

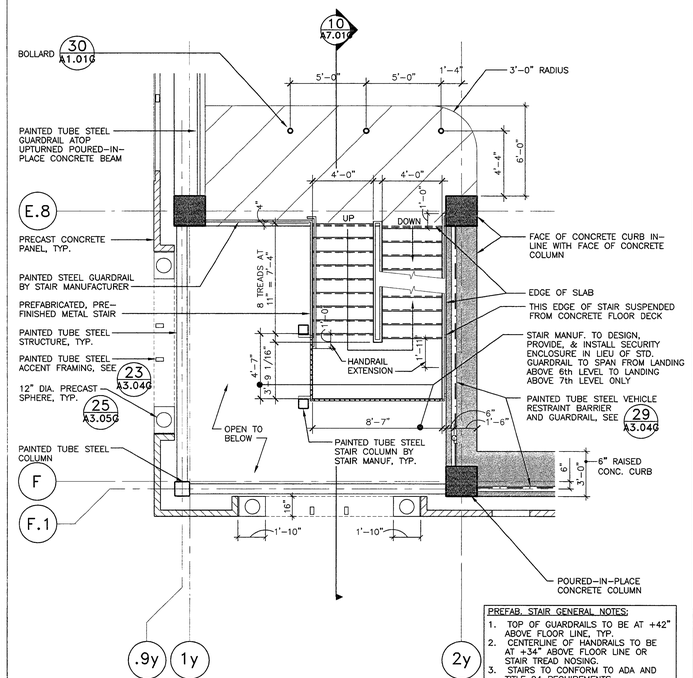

PREFAB. STAIR GENERAL NOTES:
1. TOP OF GUARDRAILS TO BE AT +42" ABOVE FLOOR LINE, TYP.
2. CENTERLINE OF HANDRAILS TO BE AT +34" ABOVE FLOOR LINE OR STAIR TREAD NOSING.
3. STAIRS TO CONFORM TO ADA AND TITLE 24 REQUIREMENTS.

14 A7.01G SECOND LEVEL STAIR (LEVELS 3 - 6 SIM.)
1/4"=1'-0"

ENGLISH HARPER RETA
ARCHITECTS

580 UNIVERSITY AVENUE SUITE 100
SACRAMENTO, CA 95825 (916) 568-1821

THIS DRAWING IS NOT FINAL OR TO BE USED FOR CONSTRUCTION UNTIL IT IS SIGNED BY THE ARCHITECT AND THE OWNER.

ARCHITECT
EDWARD P. ENGLISH C-10399
RICHARD L. HARPER C-13830
RONALD A. RETA C- 9879

OWNER

CONTRACTOR

LICENSED ARCHITECT RICHARD L. HARPER No. C-13830 RENEWAL 3-31-01 STATE OF CALIFORNIA

Turner Construction Company

This set of plans and specifications MUST be kept on the job at all times and is the property of the Architect. Visual contacts on same without written permission from the Building Division, City of Stockton.
APPROVED
By
Date
The issuance of this permit or approval of plans shall not be held to permit or be an approval of any violation of any provisions of any Ordinance or Law. Examining of plans does not constitute final approval.

ORIGINAL COPY

Essential Services Facility
(UNDER SEPARATE DOCUMENT PACKAGE)
Parking Garage

KEY PLAN

DATE	NO.	DESCRIPTION
1-13-2000	3	OVERALL PERMIT SET
11-15-99	2	OVERALL PLAN CHECK SET
10-18-99	1	PROGRESS SET

REVISIONS

DRAWN BY
JM

CHECKED BY

Parking Garage
15 North El Dorado Street, Stockton, California
PROGRESS PRINT

DRAWING
PARKING GARAGE STAIR SECTIONS AND DETAILS

PROJECT NO. 98113
DRAWING NO. A7.01G
CADFILE A7_01G
DATE 7 SEPTEMBER 1999

PLANS REVIEWED BY Precision Inspection Company Inspection and Consulting Services
Page 14 Of 19

WSCC_050

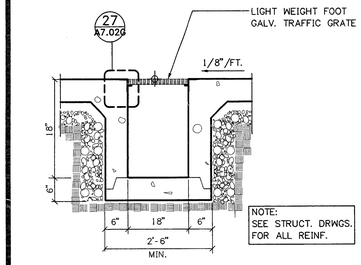

26 A7.02G SUMP PIT- SECTION
3/4"=1'-0"

ESF_9101

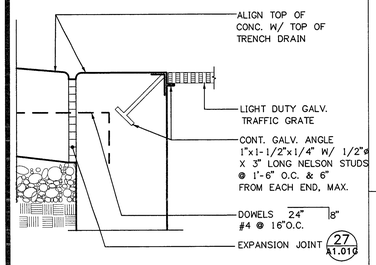

27 A7.02G EDGE OF GRATE
3"=1'-0"

ESF_9104

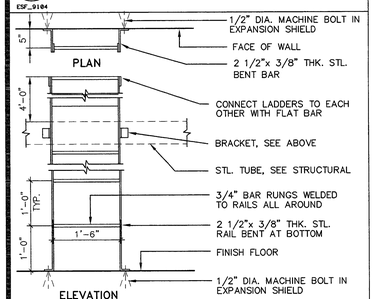

28 A7.02G LADDER PLAN / ELEVATION
3/4"=1'-0"

ESF_9108

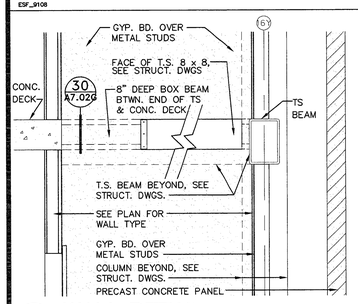

29 A7.02G WALL DETAIL
3/4"=1'-0"

ESF_9110

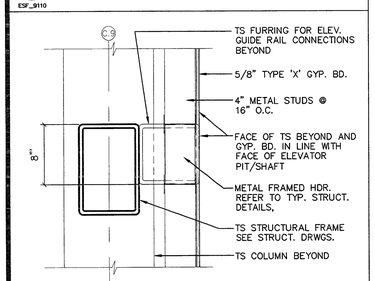

30 A7.02G WALL FRMG. @ ELEV. TS
1 1/2"=1'-0"

ESF_9114

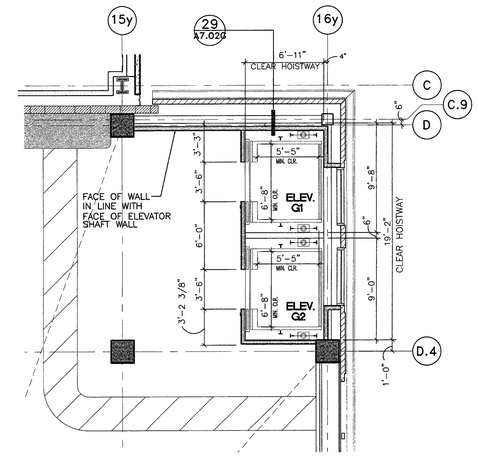

C A7.02G THIRD LEVEL ELEVATOR (LEVELS 4-7, SIM.)
3/16"=1'-0"

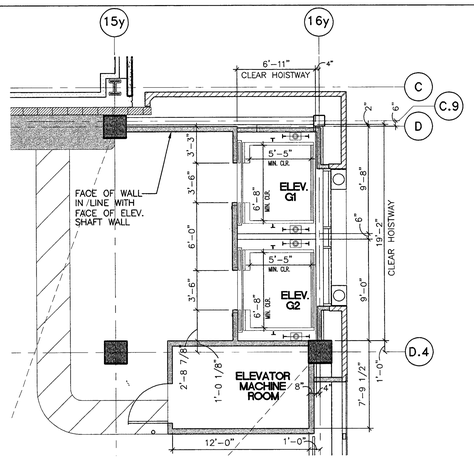

D A7.02G SECOND LEVEL ELEVATOR
3/16"=1'-0"

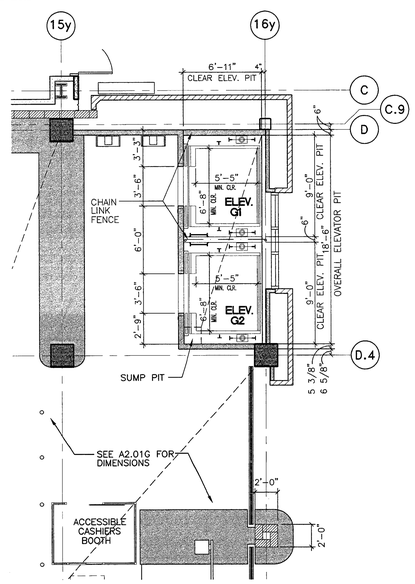

E A7.02G GROUND LEVEL ELEVATOR
3/16"=1'-0"

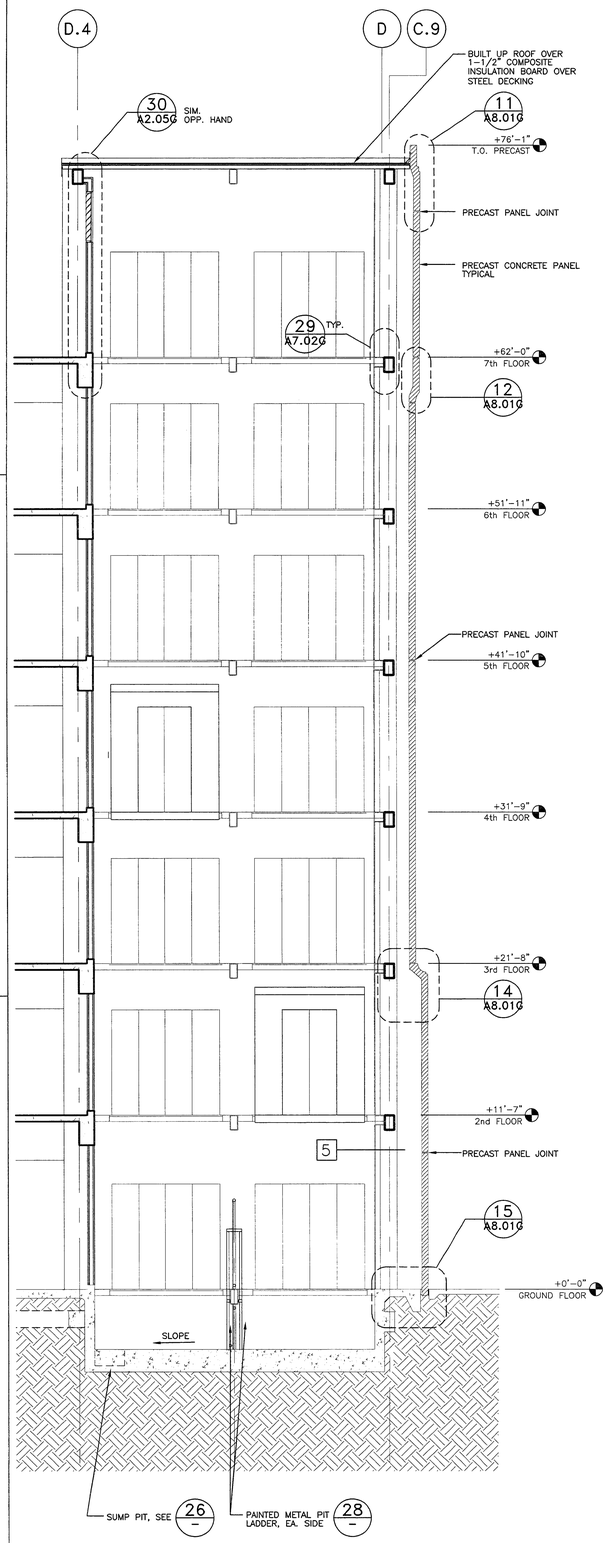

B A7.02G WALL/ELEVATOR SECTION
1/4"=1'-0"

WSEC_066

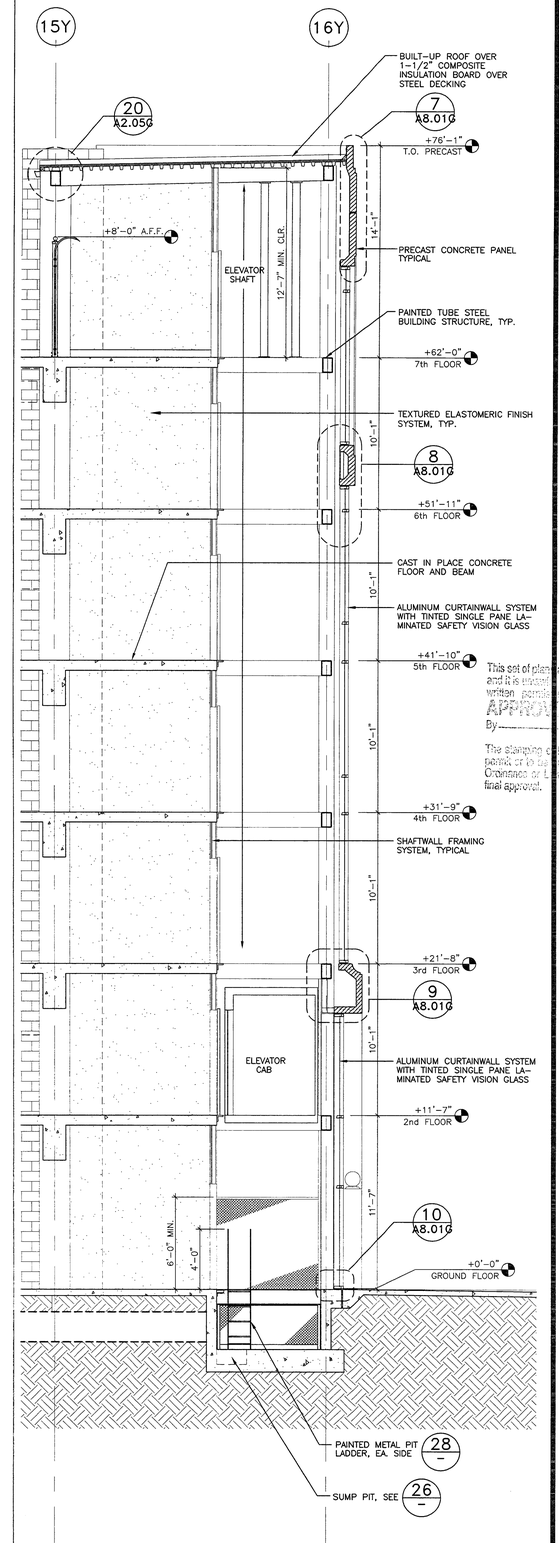

A A7.02G WALL/ELEVATOR SECTION
1/4"=1'-0"

WSEC_030

PLANS REVIEWED BY
Precision Inspection Company
Inspection and Consulting Services
Page 20 Of 129

ENGLISH HARPER RETA
ARCHITECTS

580 UNIVERSITY AVENUE SUITE 100
SACRAMENTO, CA 95825 (916) 568-1821

THIS DRAWING IS NOT FINAL OR TO BE USED FOR CONSTRUCTION UNTIL IT IS SIGNED BY THE ARCHITECT AND THE OWNER.

ARCHITECT
EDWARD P. ENGLISH C-10399
RICHARD L. HARPER C-13830
RONALD A. RETA C- 9879

OWNER

CONTRACTOR

LICENSED ARCHITECT RICHARD L. HARPER No. C-13830 REN. 3-31-01 STATE OF CALIFORNIA

Turner Construction Company

This set of plans and specifications MUST be kept on the job at all times and it is unlawful for any person to make any changes or alterations without written permission from the Building Division, City of Stockton.
APPROVED
By
The stamping of these plans and specifications shall not be held to permit or to be an approval of the violation of any provisions of any City Ordinance or State Law. Review of these plans is not to be construed as final approval.

OFFICE COPY

Essential Services Facility (UNDER SEPARATE DOCUMENT PACKAGE)
Parking Garage

KEY PLAN

DATE	NO.	DESCRIPTION
1-13-2000	3	OVERALL PERMIT SET
11-15-99	2	OVERALL PLAN CHECK SET
10-18-99	1	PROGRESS SET

REVISIONS
DRAWN BY
JM
CHECKED BY

Parking Garage
15 North El Dorado Street, Stockton, California
PROGRESS PRINT

DRAWING
PARKING GARAGE ELEVATOR SECTIONS AND DETAILS

PROJECT NO. 98113
DRAWING NO. A7.02G
CADFILE A7_02G
DATE 7 SEPTEMBER 1999

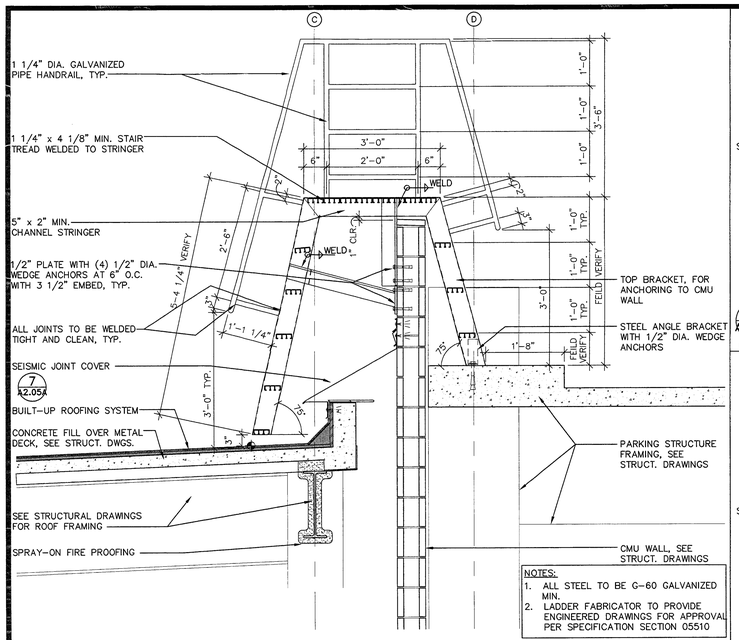

27 A8.01G SHIP LADDER DETAIL
3/4"=1'-0"
ESF_8040

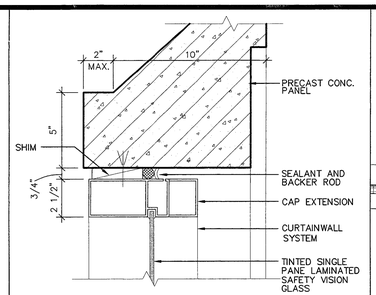

16 A8.01G C.W. HEAD/JAMB SIM.
3"=1'-0"
ESF_8047

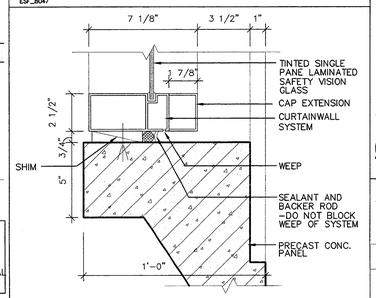

17 A8.01G C.W. SILL
3"=1'-0"
ESF_8048

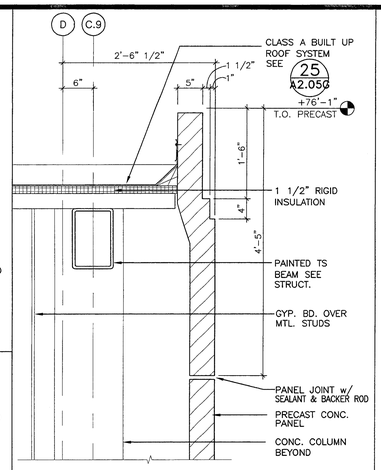

11 A8.01G PRECAST CONCRETE PANEL
1"=1'-0"
WSEC_06G

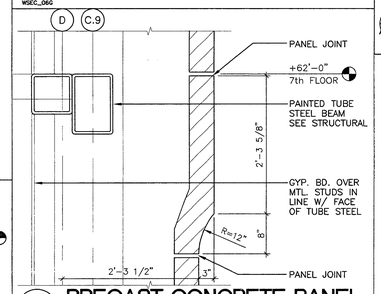

12 A8.01G PRECAST CONCRETE PANEL
1"=1'-0"
WSEC_06G

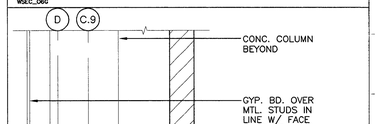

14 A8.01G PRECAST CONCRETE PANEL
1"=1'-0"
WSEC_06G

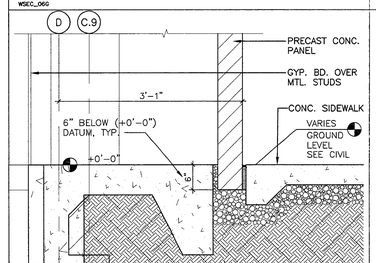

15 A8.01G PRECAST PANEL BASE
1"=1'-0"
WSEC_06G

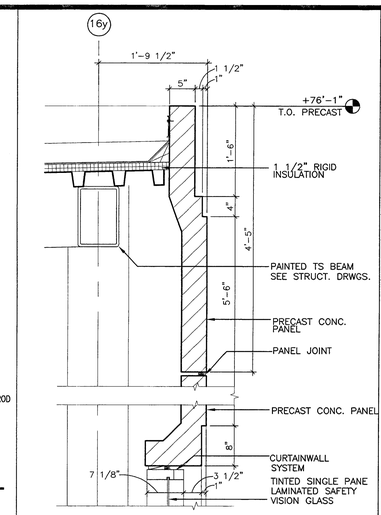

7 A8.01G PRECAST CONCRETE PANEL
1"=1'-0"
WSEC_XX

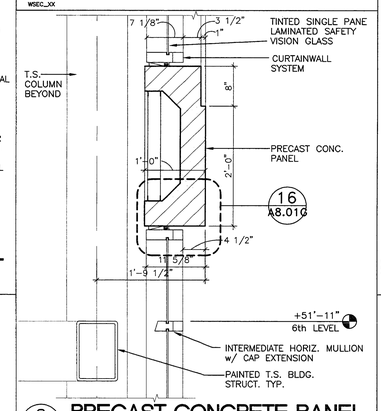

8 A8.01G PRECAST CONCRETE PANEL
1"=1'-0"
WSEC_XX

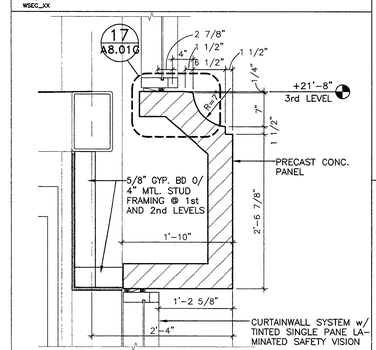

9 A8.01G PRECAST CONCRETE PANEL
1"=1'-0"
WSEC_XX

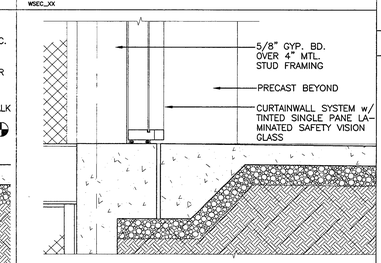

10 A8.01G CURTAINWALL SILL
1"=1'-0"
BSEC_03G

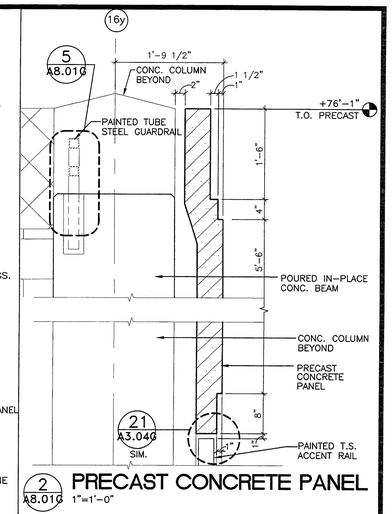

2 A8.01G PRECAST CONCRETE PANEL
1"=1'-0"

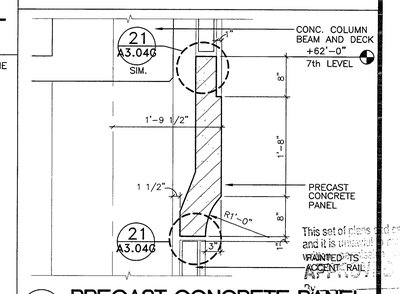

3 A8.01G PRECAST CONCRETE PANEL
1"=1'-0"

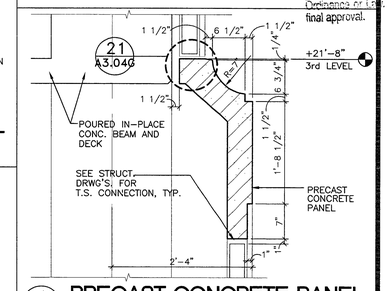

4 A8.01G PRECAST CONCRETE PANEL
1"=1'-0"

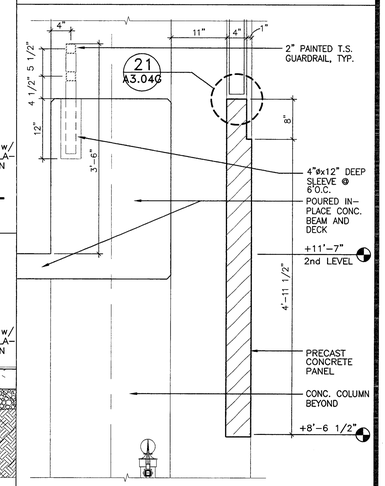

5 A8.01G PRECAST CONCRETE PANEL
1"=1'-0"
BSEC_04G

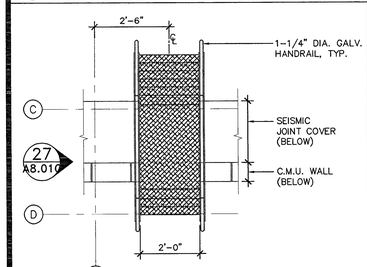

28 A8.01G SHIP LADDER (PLAN)
1/2"=1'-0"
ESF_8043

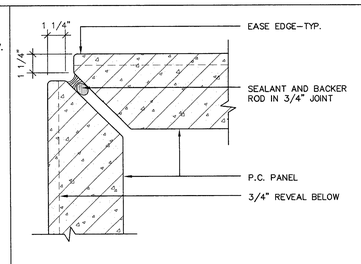

23 A8.01G CORNER @ P.C. PANEL
3"=1'-0"
ESF_8044

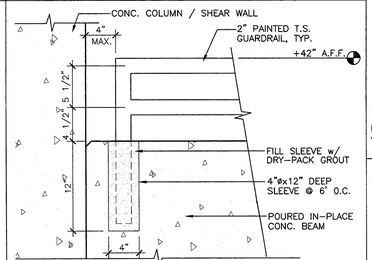

18 A8.01G GUARDRAIL END CONDITION
1 1/2"=1'-0"
ESF_8064

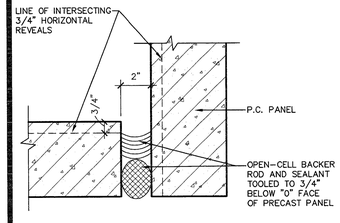

PLAN VIEW

29 A8.01G P.C. PANEL @ INTERSECTION
3"=1'-0"
ESF_8065

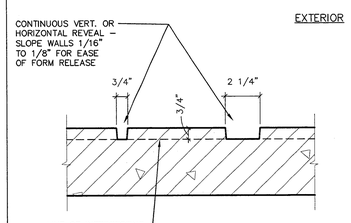

24 A8.01G PRECAST PANEL REVEAL
3" = 1'-0"
ESF_8045

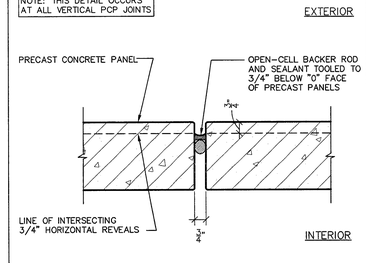

25 A8.01G PRECAST PANEL JOINT
3" = 1'-0"
ESF_8046

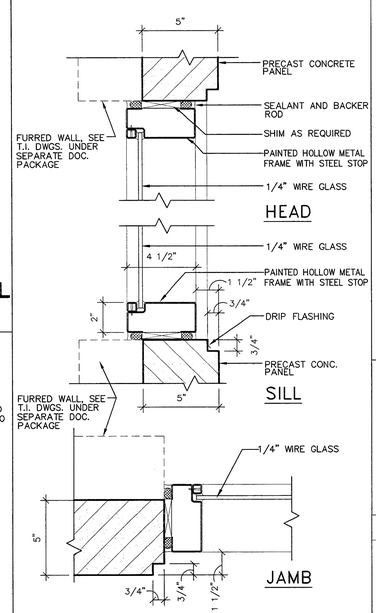

20 A8.01G HEAD/JAMB/ SILL
3"=1'-0"
ESF_8049

ENGLISH HARPER RETA
ARCHITECTS

580 UNIVERSITY AVENUE SUITE 100
SACRAMENTO, CA 95825 (916) 568-1821

THIS DRAWING IS NOT FINAL OR TO BE USED FOR CONSTRUCTION UNTIL IT IS SIGNED BY THE ARCHITECT AND THE OWNER.

ARCHITECT
EDWARD P. ENGLISH C-10399
RICHARD L. HARPER C-13830
RONALD A. RETA C- 9879

OWNER

CONTRACTOR

REGISTERED ARCHITECT RONALD A. RETA No. C-9879 EXPIRES 3-31-01 STATE OF CALIFORNIA

Turner Construction Company

This set of plans and specifications MUST be kept on the job at all times and it is unlawful to make any changes or alterations on same without permission from the Building Inspection, City of Stockton.
Date _____
Permit No. _____
The stamping of this plan and specification shall not be held to permit or to be an approval of the violation of any provisions of any City Ordinance or State Law. Occupancy is prohibited prior to the issuance of final approval.

ORIGINAL COPY

Essential Services Facility
(UNDER SEPARATE DOCUMENT PACKAGE)
Parking Garage

KEY PLAN

1-13-2000	3	OVERALL PERMIT SET	
11-15-99	2	OVERALL PLAN CHECK SET	
10-18-99	1	PROGRESS SET	
DATE	NO.	DESCRIPTION	

REVISIONS
DRAWN BY
JM
CHECKED BY

Parking Garage
15 North El Dorado Street, Stockton, California
PROGRESS PRINT

DRAWING
PARKING GARAGE
PRECAST CONCRETE
PANEL PROFILES / DETAILS

PROJECT NO. 98113
DRAWING NO. A8.01G
CADFILE A8_01G
DATE 7 SEPTEMBER 1999

PLANS REVIEWED BY Precision Inspection Company
Inspection and Consulting Services
Page 21 Of 119

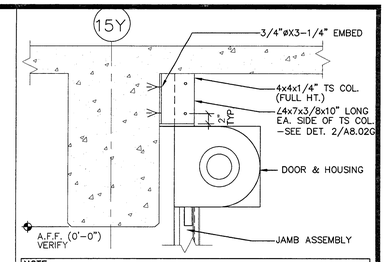

NOTE:
PRIOR TO DRILLING FOR EXPANSION ANCHORS IN POST TENSIONED ELEVATED SLABS AND/OR BEAMS, CONTRACTOR SHALL CAREFULLY LOCATE TENDONS TO AVOID CONFLICT OR DAMAGE. MAINTAIN 2" MINIMUM CLEARANCE TO ANY TENDONS.

1 A8.02G — COILING DOOR HEAD G139 (TOP OF SOUTH JAMB) 1"=1'-0"

ESF_8091

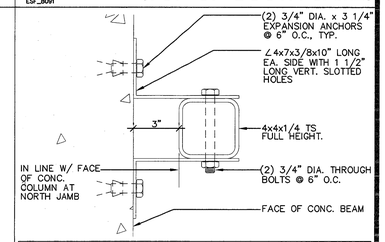

NOTE:
PRIOR TO DRILLING FOR EXPANSION ANCHORS IN POST TENSIONED ELEVATED SLABS AND/OR BEAMS, CONTRACTOR SHALL CAREFULLY LOCATE TENDONS TO AVOID CONFLICT OR DAMAGE. MAINTAIN 2" MINIMUM CLEARANCE TO ANY TENDONS.

2 A8.02G — TUBE STEEL @ DOOR G139 (TOP OF SOUTH JAMB) 3/4"=1'-0"

ESF_8090

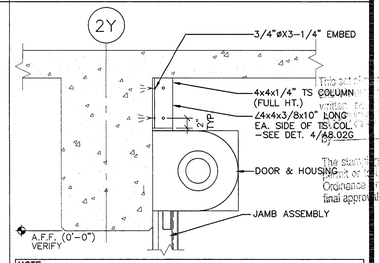

NOTE:
PRIOR TO DRILLING FOR EXPANSION ANCHORS IN POST TENSIONED ELEVATED SLABS AND/OR BEAMS, CONTRACTOR SHALL CAREFULLY LOCATE TENDONS TO AVOID CONFLICT OR DAMAGE. MAINTAIN 2" MINIMUM CLEARANCE TO ANY TENDONS.

3 A8.02G — COILING DOOR HEAD G104 (TOP OF SOUTH JAMB) 1"=1'-0"

ESF_8087

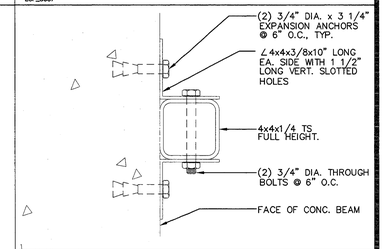

NOTE:
PRIOR TO DRILLING FOR EXPANSION ANCHORS IN POST TENSIONED ELEVATED SLABS AND/OR BEAMS, CONTRACTOR SHALL CAREFULLY LOCATE TENDONS TO AVOID CONFLICT OR DAMAGE. MAINTAIN 2" MINIMUM CLEARANCE TO ANY TENDONS.

4 A8.02G — TUBE STEEL @ DOOR G104 (TOP OF SOUTH JAMB) 3/4"=1'-0"

ESF_8088

PLANS REVIEWED BY
Precision Inspection Company
Inspection and Consulting Services
Page 28 Of 114

ENGLISH HARPER RETA
ARCHITECTS

580 UNIVERSITY AVENUE SUITE 100
SACRAMENTO, CA 95825 (916) 568-1821

THIS DRAWING IS NOT FINAL OR TO BE USED FOR CONSTRUCTION UNTIL IT IS SIGNED BY THE ARCHITECT AND THE OWNER.

ARCHITECT
EDWARD P. ENGLISH C-10399
RICHARD L. HARPER C-13830
RONALD A. RETA C- 9879

OWNER

CONTRACTOR

REGISTERED ARCHITECT RICHARD L. HARPER C-13830 EXPIRES 3-31-01 STATE OF CALIFORNIA

Turner Construction Company

This set of plans and specifications must be kept on the job at all times and it is unlawful to make any changes or alterations on same without permission from the Building Inspection Department, City of Stockton.

By _____

The stamp of approval of plans and specifications does not constitute a permit or authorize the violation of any of the provisions of any City Ordinance or Law. Construction permits must be secured before work is started. Permits are issued only to licensed contractors, or to owners of property working with their own employees on projects which are entirely owned by them and which will not be sold or leased within one year after completion of the work. Permits will be issued only after working drawings have been approved and final approval.

ORIGINAL COPY

Essential Services Facility
(UNDER SEPARATE DOCUMENT PACKAGE)

Parking Garage

KEY PLAN

DATE	NO.	DESCRIPTION
1-13-2000	3	OVERALL PERMIT SET
11-15-99	2	OVERALL PLAN CHECK SET
10-18-99	1	PROGRESS SET

REVISIONS

DRAWN BY
JM

CHECKED BY

Parking Garage
15 North El Dorado Street, Stockton, California
PROGRESS PRINT

DRAWING
PARKING GARAGE
EXTERIOR DETAILS

PROJECT NO. 98113
DRAWING NO. A8.02G
CADFILE A8_02G
DATE 7 SEPTEMBER 1999

GENERAL NOTES

APPLICABLE TO ALL DRAWINGS UNLESS NOTED OR SHOWN OTHERWISE

GENERAL NOTES

1.000GN01-1

1. Interpretation of Drawings & Specifications
   a) For convenience, specifications have been prepared for this project and are arranged in several sections, but such separation shall not be considered as the limits of the work required of any separate trade. The terms and conditions of such limitations are wholly between the contractor and his subcontractors.
   b) In general, the working details will indicate dimensions, position and kind of construction, and the specifications, qualities and methods. Any work indicated on the working details and not mentioned in the specifications, or vice versa, shall be furnished as though fully set forth in both. Work not particularly detailed, marked or specified, shall be the same as similar parts that are detailed, marked or specified. If conflicts occur on drawings and/or specifications, the most expensive materials or methods will be assumed.
   c) Should an error appear in the working details or specifications or in work done by others affecting this work, the Contractor shall notify the Architect at once and in writing. If the Contractor proceeds with the work so affected without having given such written notice and without receiving the necessary approval, decision or instructions in writing from the Owner, then he shall have no valid claim against the Owner, for the cost of so proceeding and shall make good any resulting damage or defect. No verbal approval, decision, or instruction shall be valid or be the basis for any claim against the Owner, its officers, employees or agents. The foregoing includes typical errors in the specifications or notational errors in the working details where the interpretation is doubtful or where the error is sufficiently apparent as to place a reasonably prudent contractor on notice that, should he elect to proceed, he is doing so at his own risk.
2. Construction shall conform to all applicable codes and regulations.
3. Shop Drawing Note:
   a) Shop Drawings shall be submitted in the form of one sepia transparency and two blue line prints of each sheet.
   b) The purpose of Shop Drawings submittals by the Contractor is to demonstrate to the Structural Engineer that he understands the design concept by indicating which material he intends to furnish and install, and by detailing the fabrication and installation methods he intends to use.
   c) Prior to fabrication, Shop Drawings shall be submitted for review by the Structural Engineer. Shop Drawing submittals shall include, but are not necessarily limited to, structural steel, reinforcing steel, & glued laminated beams.
   d) Prior to submission the Contractor shall review all submittals for conformance with the Contract Documents and shall stamp submittals as being "Reviewed for Conformance".
   e) Shop Drawings submittals processed by the Structural Engineer are not Change Orders.
   f) Any detail on the Shop Drawing that deviates from the Contract Documents shall clearly be marked with the note "This a change".
   g) Shop drawings and/or calculations submitted for review that require resubmittal for re-review shall be billed hourly for such time to the General Contractor. Re-review will not proceed without approval from the General Contractor for additional engineering review services.
4. Safety Note:
   a) It is the Contractors responsibility to comply with the pertinent sections, as they apply to this project, of the "Construction Safety Orders" issued by the State of California latest edition, and all OSHA requirements.
   b) The Owner and the Structural Engineer do not accept any responsibility for the Contractor's failure to comply with these requirements.
   c) The Contractor shall be responsible for adequate design and construction of all forms and shoring required.
5. The contractor shall notify the Architect and Structural Engineer where a conflict or discrepancy occurs between the Structural drawings and any other portion of the Contract Documents or existing field conditions. Such notification shall be given in due time as not to affect the construction schedule. In case of a conflict between Structural drawings and specifications the more restrictive condition shall take precedence unless written approval has been given for the least restrictive. Contractor shall verify all dimensions with Architectural prior to commencing any work.
6. Where no specific detail is shown, the construction shall be identical or similar to that indicated for like cases of construction on this project. Should there be any question, contact the Architect and Structural Engineer prior to proceeding.
7. When construction attaches to an existing building, a complete set of drawings of the existing building shall be kept on the job site. Contractor to obtain these drawings from the Owner.
8. Contractor shall provide an allowance equal to 2% of the bid for structural steel, misc. iron and reinforcing steel to be used at the discretion of the Structural Engineer. Unused amount to revert to the Owner upon completion of the job.
9. Any substitutions for structural members, hardware or details shall be reviewed by the Architect and Structural Engineer. Such review will be billed on a time and materials basis to the General Contractor with no guarantee that the substitution will be allowed.
10. Do not scale drawings. Contact the Architect or Structural Engineer for any dimensions not shown.
11. These drawings are not complete until reviewed and accepted by local Building Officials and signed by the Owner and the Structural Engineer.

ABBREVIATIONS

1.000SN03-1

AB ----------	Anchor Bolt	MI ----------	Malleable Iron
abv ----------	Above	(n) ----------	New
blw ----------	Below	NIC ----------	Not in Contract
bof ----------	Bottom of Footing	NS ----------	Near Side
btwn ----------	Between	nts ----------	Not to Scale
cc ----------	Center to Center	NW ----------	Normal Weight
CJ ----------	Control Joint	OH ----------	Opposite Hand
clr ----------	Clear	OSB ----------	Oriented Strand Board
CMU ----------	Concrete Masonry Unit	pc ----------	Piece
CNJ ----------	Construction Joint	pa ----------	Partial Joint Penetration
cont ----------	Continuous	PT ----------	Pressure Treated
contr ----------	Contractor	RW ----------	Redwood
cp ----------	Complete Joint Penetration	SC ----------	Slip Critical
csk ----------	Countersink	sim ----------	Similar
DF ----------	Douglas Fir	SMS ----------	Sheet Metal Screw
DL ----------	Dead Load	SP ----------	Structural Plywood
do ----------	Ditto	stfnr ----------	Stiffener
dwg ----------	Drawing	stgrd ----------	Staggered
(e) ----------	Existing	t&b ----------	Top & Bottom
EF ----------	Each Face	t&g ----------	Tongue & Groove
EJ ----------	Expansion Joint	thrd ----------	Threaded
El ----------	Elevation	tn ----------	Top Nail
EN ----------	Edge Nailing	to ----------	Top of
eos ----------	Edge of Slab	toc ----------	Top of Concrete (slab uno)
eq ----------	Equal	tof ----------	Top of Footing or Top of Framing
EW ----------	Each Way	tos ----------	Top of Steel
EWEF ----------	Each Way Each Face	tow ----------	Top of Wall
FB ----------	Face of Block(or Brick) or Flat Bar	TS ----------	Tube Steel
FC ----------	Face of Concrete or Framing Clip(Simpson A35)	uno ----------	Unless Noted Otherwise
		w/ ----------	with
FF ----------	Finish Floor	w/o ----------	without
FS ----------	Face of Stud or Far Side	wp ----------	Work Point
ga ----------	Gauge or gage	WS ----------	Wood Screw
glb ----------	Glued Laminated Beam	WWF ----------	Welded Wire Fabric
hdr ----------	Header	℄ ----------	Centerline
HSB ----------	High Strength Bolt	▭ ----------	Plate
ht ----------	Height	WF ----------	Wide Flange
jh ----------	Joist Hanger	# ----------	Number or Pounds
LL ----------	Live Load	sq ----------	Square
LLH ----------	Long Leg Horizontal	ø ----------	Round
LLV ----------	Long Leg Vertical	▭ ----------	Cont Wood in Section
LS ----------	Log Screw	▭ ----------	Wood Blocking in Section
LW ----------	Light Weight	▭ ----------	End of Wood Piece
MB ----------	Machine Bolt	(a) ----------	"member" above
mfr ----------	Manufacturer	(b) ----------	"member" below

DESIGN CRITERIA

1003GN02-1

1. Codes and Standards
   1997 Uniform Building Code (UBC)
   1999 ACI
   1989 AISC
2. Vertical loads
   Roof Live Load = 20 psf
   Floor Live Load = 50 psf
   Live loads are reduced where permitted by code.
3. Lateral loads
   Seismic:
   Zone 3 ; Z = 0.3
   R = 5.5 ; I = 1.0
   Wind:
   75 mph - Exposure C
   I = 1.0
4. Soils Values
   See sheet S3.01 for precast concrete piles

TESTS AND INSPECTIONS

1. Tests and Inspections shall be provided by a qualified testing agency as required below and shall conform to the requirements of the 1997 U.B.C. Section 1701. Testing and inspection records shall be kept for all structural concrete in accordance with section 1928A.7 of the 1998 California Building Code.

Tests:	Inspections:
■ Fill Compaction	■ Footing Excavation
□ Reinforcing Steel	■ Pile/Pier Installation
■ Concrete	■ Reinforcement Placement
● Structural Steel	■ Concrete Placement
■ Masonry	■ Shop Welding
■ Grout and Mortar	■ Field Welding
■ Epoxy & Expansion Anchors	■ High Strength Bolting
□ Shotcrete	■ Masonry Placement & Grouting
	■ Shear Stud Installation
	■ Epoxy & Expansion Anchors
	□ Shotcrete
	■ Anchor Bolts Installation @ Braced Frames

● All material and mill certificates shall be submitted prior to fabrication

All shop welds delivered to the site shall have a certificate of compliance from an ICBO approved agency.

FOUNDATIONS

1. All foundation work shall be done in accordance with the requirements of the Soils Report #5150.001 by Geomatrix Consultants dated 9/99 with preliminary soils reports dated 1/19/99 and 1/29/99.
2. Foundations shall bear on driven precast concrete piles See notes and details on sheet S2.01 &S3.01
3. All filling, backfilling and compaction shall be done under the observation of the Soils Engineer and must be compacted to a minimum relative compaction of 90% in accordance with the procedure outlined in the soils report.
4. Building pad construction shall conform to the requirements of the soils report. The extent and depth of overexcavation and placement of engineered fill shall at a minimum be as shown on the plans. Final depth and extent of excavation and fill shall be determined at time of construction by a representative of the Soils Engineer. Foundation depths indicated on plans are for estimating purposes only.
5. Bottoms of all foundations shall be level. Changes in bottom of foundation elevation shall be made according to Stepped Footing Detail on the Typical Detail Sheet.
6. Per the Geotechnical report, pile caps and grade beams should be poured neat against excavation sidewalls (ie, without forming). Measures may be needed to prevent sloughing (such as pouring pile caps soon after excavation, restricting foot and vehicle traffic near excavations, etc).
7. Notify the Structural Engineer 48 hours before casting foundations.
8. The Soils Engineer shall advise the Building Official in writing that:
   a. The building pad was prepared in accordance with the soils report.
   b. The utility trenches have been properly backfilled and compacted and;
   c. The foundation excavations, forming and reinforcement comply with the report and approved plan.

CONCRETE

3.300SN01-1

1. Structural concrete shall attain 28 day compressive strength as required in note #26. Maximum slump shall not exceed 4 inches.
2. Concrete mix design shall be prepared by an independent laboratory and reviewed by the Structural Engineer.
3. Cement shall conform to ASTM C-150.
4. Concrete aggregates shall conform to ASTM C-33 for normal weight and ASTM C-330 for light weight.
5. Non-shrink grout or drypack shall consist of a premixed nonmetallic formula.
6. Reinforcing steel shall conform to ASTM A-615 Grade 60 for #4 and larger, and ASTM A-615 Grade 40 for #3 and smaller, except reinforcing steel to be welded shall conform to ASTM A-706.
7. All preheating and welding of reinforcing bars shall be done in accordance with AWS D1.4 latest edition. Welding shall be continuously inspected by a qualified laboratory. Contractor shall furnish to the laboratory, rebar mill certificates. Reinforcing steel shall be fabricated according to "Manual of Standard Practice for Reinforced Concrete Construction".
8. Welding rods conform to ASTM A-185.
9. Dimensions shown for location of reinforcing are to the face of main bars and denote clear coverage. Concrete coverage shall be as follows:

Concrete deposited against ground (except slabs)---	3"
Concrete exposed to ground but placed in forms-----	2"
Tied Columns (main bars)-----------	1-1/2"
Beams (top bars)-----------	1-1/2"
Beams (all other main reinforcing)-----------	2"
Walls (exterior face)-----------	1-1/2"
Walls (interior face)-----------	3/4"
Slabs (on ground)-----------	3/4"
Slabs (on ground)-----------	2" clear from top uno

10. Splices in continuous reinforcing bars shall be as follows: Splices shall splices be less than 48 bar diameters. Splices in adjacent bars shall be not less than 5'-0" apart. Splice continuous bars in soil-bearing grade beams as follows: top bars at centerline of support. All bars size #14 and larger shall be continuous for the full length shown. Splices in WWF shall be 1-1/2 meshes wide.
11. All hooks shall be standard hooks unless otherwise shown or noted.
12. Construction joints shall be made rough and all laitance removed from the surface. Concrete may be roughened by chipping the entire surface, sand blasting, or raking the surface to provide 1/4" deep deformations.
13. Remove all debris from forms before casting any concrete.
14. Reinforcing, dowels, bolts, anchors, sleeves, etc., to be embedded in concrete shall be securely positioned before placing concrete.
15. Welds shall be cast in horizontal layers of 2'-0" maximum depth.
16. Concrete in walls, piers or columns shall set at least 2 hours before placing concrete in beams, spandrels, or slabs supported thereon.
17. Horizontal wall bars in double layer walls shall be staggered.
18. Dowel all vertical reinforcing in walls and columns from foundation with same size bar.
19. Consolidate concrete placed in forms by mechanical vibrating equipment supplemented by hand-spading, rodding or tamping. Use of equipment and procedures for consolidation of concrete in accordance with the recommended practices of ACI 309 to suit the type of concrete and project conditions. Concrete shall be placed through reinforcing steel (as in walls) so as to cause segregation of aggregates. In such cases hoppers and chutes or trunks of variable lengths shall be used so that the free unconfined fall of concrete shall not exceed 6 feet.
20. Drill through steel columns, beams and plates to pass continuous reinforcing.
21. No wood spreaders allowed. No wood stakes allowed in areas to be concreted.
22. Additional reinforcing in precast or tilt-up panels required for lifting stresses shall be supplied by Contractor.
23. Provide 2 - #5 x 4'-0" diagonal reinforcing at mid-depth of slab at all re-entrant corners typical.
24. All saw cutting shall be done after initial set has occurred to avoid tearing or damage by the saw blade, but before initial shrinkage has occured.
25. CONCRETE STRENGTHS:

Item	f'c at 28 days	Max Aggregate Size	Weight	Max w/c Ratio
A. Footings & grade beams & piers	4000	1 1/2"	NW	0.50 7 sack min
B. Slab on grade/walls	4000	1"	NW	0.50 7 sack min
C. Lean mix conc fill	1500	1 1/2"	NW	3.5 sack min
D. Columns	4000	3/4"	NW	0.50 7 sack min

STRUCTURAL STEEL

5.010SN01-1

1. Fabrication, erection and materials shall conform with the AISC Specification for the Design, Fabrication and Erection of Structural Steel for Buildings and the Uniform Building Code, latest editions.
2. Structural Steel rolled shapes and plates shall conform with ASTM A-36 or A-572, grade 50 as noted.
3. Steel Pipe shall conform to ASTM A-53, Types E or S, Grade B.
4. Structural Tubing shall conform to ASTM A-500, Grade B.
5. All structural steel shall receive minimum of one shop coat of red primer paint. Do not paint areas to be field welded, to receive friction type high strength bolts, or to be embedded in concrete. Provide additional painting as noted in the specifications.
6. All structural steel shall be erected plumb and true to line. Temporary bracing shall be installed and shall be left in place until other means are provided to adequately brace the structure.
7. Place non-shrink grout under all base plates before adding vertical load.
8. Wrap structural steel embedded in concrete with 6"x6"/W1.4 x W1.4 WWF.
9. Structural steel below grade shall have 3 inches minimum of concrete cover.
10. Bolted connections shall consist of unfinished bolts conforming to ASTM A-307 unless noted otherwise. Where high strength bolts are indicated, bolts conforming to ASTM A-325 or ASTM A-490 shall be provided.
11. "Slip-critical" bolted connections;
    a) "Slip-critical" connections (A325SC design values with special inspection) are required at all braced frame connections, at all connections along chord lines and drag lines (as noted on plans), and at all bolts in oversized or slotted holes.
    b) The special inspector must be present during installation and tightening operation of "slip-critical" connections.
12. Provide 3/4" diameter stitch bolts and ring fills, spaced at not more than 2'-0" on center for all double angle members.
13. At wood to steel parallel contact, bolt with 1/2" diameter bolts at maximum 24"oc.
14. Holes for unfinished bolts shall be of the same nominal diameter of the bolt plus 1/16". Use standard AISC gage and pitch for bolts except as noted otherwise.
15. Holes for anchor bolts embedded in concrete shall be of the same nominal bolt diameter plus 3/16" unless noted otherwise.
16. Welding shall be done by the electric arc process in accordance with American Welding Society Standards, using only certified welders. All groove welds shall have complete penetration unless noted otherwise. All exposed welds shall be ground smooth.
17. Weld lengths called for on plans are the net effective lengths required.
18. Minimum fillet welds: 3/16" @ t < 1/2"
    1/4" @ t < 3/4"
    5/16" @ t > 3/4"
19. Welding Procedure Specifications (WPS) for shop and field prequalified weld joints and weld joints qualified by test shall be prepared for review prior to fabrication. All welding procedure items such as base metals, welding processes, filler metals and joint details that meet the requirements of AWS D1.1 Section 5.1 shall be considered as prequalified. Any change or substitution that is beyond the range or tolerance or requirements for prequalification shall be qualified by test per AWS D1.1 Section 5 part B. Welds at base metals over 2 inches in thickness are not allowed as prequalified joint welds.
20. For nondestructive testing of welded connections excluding primary members of moment resisting frames:
    a) Welded connections shall be tested by nondestructive methods for compliance with UBC Section 2249 J2 or 2251 J2, and job specifications. Ultrasonic Testing shall be in accordance with AWS D1.1 ASTM E164 and ASME Section V. Radiography shall be in accordance with AWS D1.1, ASTM E94 and E99, and ASME Section V. This testing shall be part of the special inspection requirements of UBC Section 1701 performed by an approved independent testing laboratory as follows:
       1. Base metal thicker than 1 inch when subject to through thickness weld shrinkage strains.
       2. All complete penetration groove or butt welds.
       3. All partial penetration groove welds when used in column splices.
    b) Any material discontinuities shall be accepted or rejected on the basis of defect rating in accordance with the (larger reflector) criteria of UBC Section 2249 J2 or 2251 J2.

METAL DECK NOTES

5.300SN01-1

1. Provide metal decking of type and gauge as shown on plans.
2. Metal floor deck shall be composite type, conforming to ASTM A653, structural quality, with minimum yield strength of 38 ksi and shall be zinc coated per ASTM A525, G-60 grade coating.
3. Metal roof deck shall conform to ASTM A653, structural quality, with minimum yield strength of 38 ksi and shall be galvanized per ASTM A525, Grade 60 coating.
4. Prior to fabrication, the Contractor shall submit shop drawings for the metal decking, showing deck gauge, size and layout as well as closure conditions, welds to supports and side lap details.
5. Connection and welding of decking to structural supports and deck side seams shall be as specified in the structural drawings.
6. The General Contractor shall coordinate the load requirements from all subcontractors so that no combination of loads exceeds the limitations given in design criteria.
7. All reinforced openings in metal deck shall be installed by metal deck subcontractor.
8. At metal decks to receive concrete, absolutely no conduit or piping of any type is to be placed horizontally within the depth of the concrete above the metal deck.
9. At metal decks without concrete, hang no more than 50 lbs. at 1-1/2" deck (20 gauge min.) and 100 lbs. at 3" deck (20 gauge min.) per metal deck rib in any span; space hangers no closer than 2'-0"cc perpendicular to span.
10. Where suspension at canger wires are required by others, verify and coordinate locations, patterns, spacings, etc. with the appropriate trade. Drill or punch holes at bottom of deck flutes of sufficient size to pass support wires. Wire supports shall be looped and secured with a minimum of three (3) tight turns around a minimum 1-1/2" x 8" long furring channel or No. 3 x 8" long reinforcing bar centered above the hole and laid in the deck flutes.

COLD FORMED METAL FRAMING

5.435SN01-1

1. Galvanized sheet steel shall conform to ASTM A653, structural quality, with a minimum yield strength of 33 ksi for 18 ga and lighter and ASTM A653, structural quality, with a minimum yield strength of 50 ksi for 16 ga and heavier. Hot-rolled carbon sheet and strip steel used in the fabrication of cold-formed members shall conform to ASTM A570 with a rust inhibitive coating.
2. Metal studs and joists shall be of size and gauge shown on drawings with the minimum deflection section properties shown in the table(s).
3. Minimum thickness shown in table for the gauge specified represents 95% of design thickness per 1986 AISI Code, Section A3.4.
4. Metal framing shall be per ICBO ES No. 4943P. Contractor shall be responsible for obtaining structural safety approval for any substitutions.
5. Welding shall be in accordance with AWS D1.3 "Structural Welding Code—Sheet Steel". Welders shall be AWS certified. Welding Rods: E60XX series. All field welding shall be subject to special inspection.
6. Metal tracks shall be same gauge as studs which it supports, unpunched, with minimum flange width of 1 1/4 inches, except where slotted slip tracks are required. See typical metal stud details.
7. Metal studs shall not have punch-outs closer than 1 1/2 times the depth of the stud from the end of the stud or at intermediate lateral bearing points of studs.

POWDER ACTUATED FASTENERS (SHOT PINS)

1.000SN16-1

1. These notes govern all conditions called out on the plans as 'shot pins' unless specifically noted otherwise.
2. All shot pins shall be as manufactured by Hilti Incorporated. Reference shall be made to the 1992 "Product Technical Guide" for additional information.
3. Shot pins driven into steel base material shall be X-DNI type with P8 washers. Length of pin shall be as required to penetrate through the steel base material. Minimum edge distance to any connected part shall be 1/2" and minimum fastener spacing shall be 2".
4. Shot pins driven into concrete base material shall be X-DNI type with P8 washers. Length of pin shall be as required to penetrate 1-1/2" into the concrete base material. Minimum edge distance to any concrete material shall be 3" and minimum fastener spacing shall be 4".
5. Shot pins driven into concrete base material through metal deck shall be X-DNI type with P8 washers. Length of pin shall be as required to penetrate 1" into the concrete through the low flute. Pin shall be centered in the low flute and minimum fastener spacing shall be 4".
6. Where steel washers are indicated on the drawings, pins shall be X-DNI or X-ZF pins with premounted steel washers with a minimum diameter of 15 mm.

HOLLOW CONCRETE UNIT MASONRY (BLOCK)

4.200SN01-1

1. Concrete block units shall conform to ASTM C-90 Type I units. Compressive strength of units to be 1900 psi for gross area and 2000 psi for net area. F'm = 1500 psi. F'm shall be verified in accordance with section 2105.3 of the 1994 UBC. Block units shall be fabricated with a "Colfrank Cor-T (1 1/2" face shells);
2. Mortar shall be proportioned to attain a 28 day compressive strength of 1800 psi. Use a minimum of 1 part Portland cement to 1/4 - 1/2 part hydrated lime with sand at 2-1/2 to 3 times combined volume of cement and lime. 2" cubes shall test 1800 psi in 28 days. When required, mortar strength shall be verified in accordance with section 2105.4 of the 1994 UBC.
3. Grout shall be proportioned to attain a 28 day compressive strength of 2000 psi. Use a minimum of 1 part Portland cement to 3 parts sand. Add 1 lb. of Sika Grout Aide Type II, or equal, per 100 lb. of cementitious material. 1 to 2 parts of pea gravel shall be used where the least clear cell dimension exceeds 2 inches. Not more than 5% of the pea gravel shall pass the No. 8 sieve and 100% shall pass the 3/8" sieve. When required, grout strength shall be verified in accordance with section 2105.5 of the 1994 UBC.
4. Reinforcing steel shall conform to ASTM A-615 Grade 60 for #4 and larger, Grade 40 for #3 and smaller.
5. Minimum rebar clearance to face shell is one bar diameter or 1/2", whichever is greater.
6. Before block is placed on concrete, thoroughly clean concrete of all laitance and all loose material. Roughen as in a concrete construction joint.
7. Concrete block masonry shall be built to preserve the unobstructed vertical continuity of the cells. All head and end joints shall be solidly filled with mortar for a distance in from the face of the wall or unit not less than the thickness of the longitudinal face shells. Bond shall be provided by lapping successive courses or by equivalent mechanical anchorage.
8. Vertical cells shall have vertical alignment sufficient to maintain a clear unobstructed continuous vertical cell.
9. Low-lift grouted construction shall conform to 1994 UBC Section 2104.6.1.1.2. High-lift grouted construction shall conform to 1994 UBC Section 2104.6.1.1.3.
10. Clean out openings shall be provided at the bottoms of all cells to be filled at each lift or pour of grout where such lift or pour of grout is in excess of 4'-0" in height. Any overhanging mortar or other obstruction or debris shall be removed from inside of such cells. The clean outs shall be sealed after inspection and before grouting. Mechanically vibrate all grout pours.
11. Vertical reinforcing shall be held in position at top and bottom and at intervals not to exceed 192 bar diameters.
12. Thoroughly clean all cells and bond beams of mortar before grouting.
13. All cells shall be filled solidly with grout. All grouting shall be done under the continuous observation of a qualified inspector where indicated on plans.
14. When grouting is stopped for one hour or longer, horizontal construction joints shall be formed by stopping the pour of grout 1-1/2" below the top of the uppermost unit.
15. Every vertical bar in walls shall lap 48 diameters with a dowel of the same size extending from the foundation. Locate vertical reinforcing at centerline of wall unless shown or noted otherwise. Corry each dowel to within 3" of the bottom of the foundation and terminate with 90 degree hook. Dowels shall be straight and plumb.
16. Place all horizontal bars in bond beam units. When 2 bars are used, stagger laps minimum of 5'-0".
17. Provide 2 - #5 bars with matching footing dowels (full height of wall at jambs and extending a minimum of 2'-0" past edges of openings at head and sill) each side of all openings and each end of all walls, unless noted otherwise on drawings.
18. All embedded items (bolts, straps, etc.) shall be secured in place prior to grouting. Cut a hole in the face shell to attain a minimum of 1" grout all around embedded items.
19. All bolts in masonry shall be ASTM A307 headed bolts.
20. Use open end block for all stack bond construction.
21. All rebar shall be lap spliced as follows (u n o):

Bar Type	Lap Length	Notes
Vertical bars	48d	Splices for multiple bars in the same cell must be stgrd 24" or lapped 62d
Horizontal bars	48d	
Jamb bars	72d	
Chord bars	72d	Splices for multiple bars in the same cell must be stgrd 24" or lapped 94d
Vertical bars @ ends & corners	72d	

METAL STAIRWAYS

3.510SN03-1

1. Supplier shall provide complete design drawings and calculations for all metal stairways. Stairways shall be designed for Dead Load + 100 psf Live Load, and Seismic Loads. Supplier shall design, supply, and install all connection materials which shall include but are not necessarily limited to embedded items, bearing plates, stiffeners, diagonal struts, support angles, channels and tubes. All loading conditions resulting in eccentricities or torsion to beams and/or columns shall be resolved by the installation of stiffeners and diagonal struts, designed, supplied and installed by the supplier. Seismic forces shall be accounted for and braced back to the main structure. See Architectural drawings for stairway dimensions and details. Submit Shop Drawings and calculations signed by a Civil Engineer, registered in the state in which the project is located, for review by the Architect and/or Structural Engineer, and approval by the enforcement agency prior to fabrication. See specifications for additional design criteria.

ELEVATOR GUIDE RAILS AND SUPPORTS

1.100SN13-1

1. Guide rails, guide rail supports and brackets for elevator cab or counterweight shall be designed to resist a horizontal force of not less than 50% of the operating weight (i.e. dead weight of cab or counterweight plus 40% of the rated load) with a deflection of less than 1/4". Guide rails, supporting members and brackets shall be designed to resist horizontal service loads during running, loading and unloading with a deflection of less than 1/4" for guide rails and 1/8" for supporting members and brackets. Provide Shop Drawings and engineering calculations for the guide rails, guide rail supports and supporting brackets signed by a Civil Engineer, registered in the state in which the project is located, for review by the Architect and/or Structural Engineer, and for approval by the enforcement agency prior to fabrication. All loading conditions resulting in eccentricities or torsion to beams and/or columns shall be resolved by the installation of stiffeners and diagonal struts designed and installed by the supplier. Seismic forces shall be accounted for and braced back to the structure. For additional requirements see Title 24 part 2 and part 7. See Architectural drawings for opening/pit dimensions, locations and details.

EXPANSION ANCHOR AND ADHESIVE ANCHOR NOTES

3.505SN20-1

1. Anchors shall be installed in accordance with the recommendations given in the ICBO report.
2. Special Inspection is required for ICBO Allowable Tension values listed in table. Unless noted otherwise anchors have been designed for special inspection.
3. Design loads for anchors are not to exceed 80% of the tension and shear values listed in table.
4. Tension Test Load values are based on 80% of twice the tension values listed.
5. Allowable loads may not be increased for duration of loads such as wind or seismic forces.
6. Each anchor type (loaded in either pullout or shear) shall have 50 percent of the anchors (any random arrangement) tested in tension to the tension test loads shown in the table. If any anchor fails testing, all anchors of the same type not previously tested shall be tested until 20 consecutive anchors pass, then resume the initial testing frequency.
7. When installing drilled in anchors in existing concrete or masonry, use care and caution to avoid cutting or damaging existing reinforcing bars.
8. The testing shall be done by the Testing Laboratory and a report of the test results shall be submitted to the governing agency and Architect/ Structural Engineer. Testing shall occur 24 hours minimum after the installation of the anchors.
9. All anchors shall be installed to the maximum depth listed in the table. Use of other embedment depths must be approved by the Structural Engineer. For embedments not listed, interpolate between the values given.
10. Where the number of anchors of a specific size and type exceed 100, the following testing procedure may be used. The first 40 anchors shall be tested as specified in note 6 above. 10 percent of all additional anchors shall be tested. Any failure shall be handled in the same manner as specified in note 6 above.
11. Anchors installed in metal deck with concrete shall be installed in the center of the low flue of the decking. The decking shall have a minimum thickness of 20 gauge. The minimum depth of embedment above the top of the deck shall be 1 1/2". The effective depth of embedment is considered to be 1/2 of the metal deck height plus the depth of embedment above the top of the deck.

NORMAL WEIGHT CONCRETE ANCHORS 3.505N21-1

F'c = 3000 PSI

EXPANSION ANCHORS HILTI KWIK BOLT II				CARBON STEEL ANCHORS ICBO NO. 4627	
ANCHOR DIAMETER	EMBED. DEPTH	INSTALL TORQUE (FT-LBS)	ICBO ALLOWABLE SHEAR	ICBO ALLOWABLE TENSION	TENSION TEST LOAD
1/4"	2"	7	400	550	880
1/4"	3-3/4"	7	400	625	1000
3/8"	2-1/2"	25	1100	1210	1940
3/8"	4-1/4"	25	1100	1300	2080
1/2"	3-1/2"	45	1840	2000	3200
1/2"	6"	45	1840	2165	3460
5/8"	4"	95	3125	2670	4270
5/8"	7"	95	3125	3250	5200
3/4"	4-3/4"	225	4225	3625	5800
3/4"	8"	225	4225	4625	7400
1"	6"	325	8625	5310	8500
1"	9"	325	8625	7110	11380

LIGHT WEIGHT CONCRETE ANCHORS 3.505N22-1

F'c = 3000 PSI

EXPANSION ANCHORS HILTI KWIK BOLT II				CARBON STEEL ANCHORS ICBO NO. 4627	
ANCHOR DIAMETER	EMBED. DEPTH	INSTALL TORQUE (FT-LBS)	ICBO ALLOWABLE SHEAR	ICBO ALLOWABLE TENSION	TENSION TEST LOAD
1/4"	2"	5	400	375	600
3/8"	2-1/2"	15	1100	805	1290
1/2"	3-1/2"	30	1840	1300	2080
5/8"	4"	75	3125	1975	3160
3/4"	4-3/4"	150	4135	2725	4360

NORMAL WEIGHT CONCRETE ANCHORS 3.505N27-1

F'c = 3000 PSI

ADHESIVE ANCHORS HILTI HIT HY-150				ASTM A36 OR A193 GR B STEEL THREADED ROD ICBO NO. 5193	
ANCHOR DIAMETER	BIT DIAMETER	EMBED. DEPTH	ICBO ALLOWABLE SHEAR	ICBO ALLOWABLE TENSION	TENSION TEST LOAD
3/8"	7/16"	3-1/2"	1110	1560	2500
3/8"	7/16"	5-1/4"	1110	2010	3220
1/2"	9/16"	4-1/4"	2160	2610	4180
1/2"	9/16"	6-5/8"	2160	3700	5920
5/8"	11/16"	5"	3050	3410	5460
5/8"	11/16"	7-1/2"	3050	5010	8020
3/4"	13/16"	6-5/8"	4410	5220	8350
3/4"	13/16"	10"	4410	7620	12190
7/8"	15/16"	7-1/2"	7110	6010	9620
7/8"	15/16"	11-1/4"	7110	10540	16860
1"	1-1/16"	8-1/2"	8090	6870	10990
1"	1-1/16"	12-3/8"	8090	12330	19730

NORMAL WEIGHT CONCRETE ANCHORS 3.505N28-1

F'c = 3000 PSI

ADHESIVE ANCHORS HILTI HIT HY-150				ASTM A615 OR A706 OR 60 REBAR ICBO NO. 5193	
ANCHOR DIAMETER	BIT DIAMETER	EMBED. DEPTH	ICBO ALLOWABLE SHEAR	ICBO ALLOWABLE TENSION	TENSION TEST LOAD
#3	1/2"	3-1/2"		1410	2260
#3	1/2"	7"		2900	4640
#4	5/8"	4-1/4"		1875	3000
#4	5/8"	6-5/8"		2945	4710
#5	3/4"	5"		2625	4200
#5	3/4"	7-1/2"		4125	6600
#6	7/8"	6-5/8"		3190	5100
#6	7/8"	10"		4875	7800
#7	1"	6-5/8"		5000	8000
#7	1"	11"		10275	16440
#8	1-1/8"	8-1/4"		6565	10500
#8	1-1/8"	12"		9635	15420
#9	1-5/16"	10"		8440	13500
#9	1-5/16"	12"		12750	20400
#10	1-3/8"	12"		11250	18000
#10	1-3/8"	18"		16875	27000

ENGLISH HARPER RETA
ARCHITECTS

580 UNIVERSITY AVENUE SUITE 100
SACRAMENTO, CA 95825 (916) 568-1821

THIS DRAWING IS NOT FINAL OR TO BE USED FOR CONSTRUCTION UNTIL IT IS SIGNED BY THE ARCHITECT AND THE OWNER.

ARCHITECT
EDWARD F. ENGLISH C-10399
RICHARD L. HARPER C-13830
RONALD A. RETA C- 9879

OWNER

CONTRACTOR

Turner Construction Company

BUEHLER & BUEHLER ASSOCIATES
STRUCTURAL ENGINEERS, INC.
7300 Folsom Blvd., Suite 103
Sacramento, Ca. 95826
(916) 381-8181

REGISTERED PROFESSIONAL ENGINEER LAWRENCE E. JONES No. SE 3138 Exp. 12/31/01 STRUCTURAL STATE OF CALIFORNIA

This set of plans and specifications MUST be kept on the job site at all times for reference by building inspectors and their agents during construction. Visual contact with these plans and specifications shall be the primary method for the inspections to be performed. Verbal communications and telephone conversations shall not be binding.

The ownership of all plans and specifications shall be held in perpetuity by the Architect and shall not be used in whole or in part for any purpose or project without the written consent of the Architect. Ownership of the plans and specifications shall not be transferred to the Owner until after final approval.

COPY

Essential Services Facility (UNDER SEPARATE DOCUMENT PACKAGE)

Parking Garage

KEY PLAN

DATE	NO.	DESCRIPTION
1/13/00	3	Overall Permit Set
11/15/99	2	Progress Set
10/18/99	1	Progress Set

REVISIONS

DRAWN BY
MAR

CHECKED BY
LEJ

Parking Garage
City of Stockton, California
FOUNDATION RE-DESIGN SET

DRAWING
GENERAL NOTES

PROJECT NO. 98113

DRAWING NO. S1.01G

CADFILE S1_01.dwg

DATE 07 SEPTEMBER 1999

TYPICAL DETAILS

APPLICABLE TO ALL DRAWINGS UNLESS NOTED OR SHOWN OTHERWISE

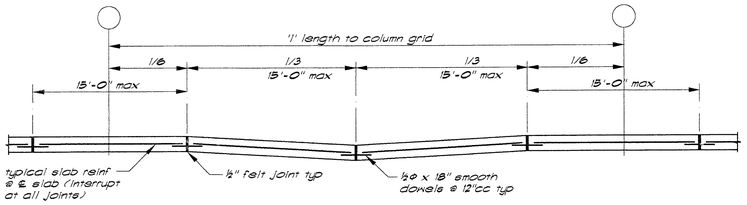

Note:
Construction joints and control joints shall divide slab into areas not exceeding 225 sq ft without reentrant corners and with length to width ratios not exceeding 1½ to 1. Contractor shall submit layout plan showing proposed control and construction joint locations. Joint spacing shall not exceed 15 feet in either direction.

Slab Articulation Joint Detail (1/S1.02)

3305001-12

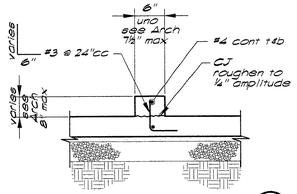

Typical Curb (2/S1.02)

3305007-12

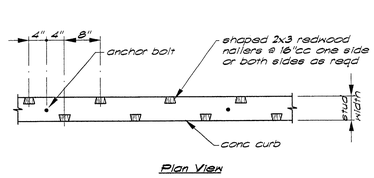

Nailers In Conc Curb (3/S1.02)

3305006-12

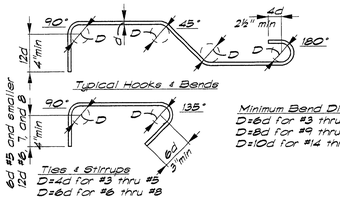

Minimum Bend Diameter
D=6d for #3 thru #8
D=8d for #9 thru #11
D=10d for #14 thru #18

Note: All hooks shall be 90° standard hooks unless otherwise shown or noted.

Standard Rebar Hooks and Bends (7/S1.02)

3305003-12

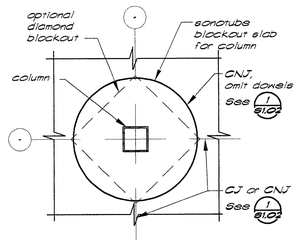

Slab Blockout (8/S1.02)

3305004-12

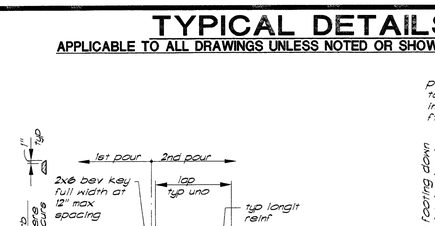

Typical Foundation Construction Joint (4/S1.02)

3305016-24

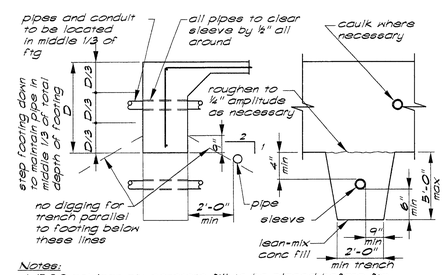

Notes:
1. 1500 psi lean mix concrete fill to be placed before ftg is cast. Make same width as ftg and full width of pipe trench.
2. Step ftg if pipe occurs in lower third of original footing depth.
3. No pipes shall be placed below spread ftgs or within 2 to 1 bearing zone around spread footing.
4. If pipe is in place prior to casting concrete, wrap pipe w/ 1" styro-foam insulation in lieu of sleeve.
5. Pipes or conduits are not allowed parallel in footing.

Concrete Footings at Pipes & Conduits (5/S1.02)

3305005-32

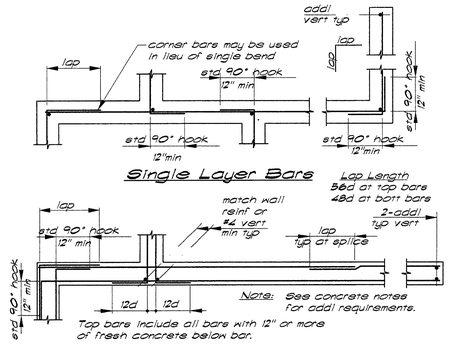

Corner Reinforcing at Concrete Walls & Ftgs (6/S1.02)

3305008-32

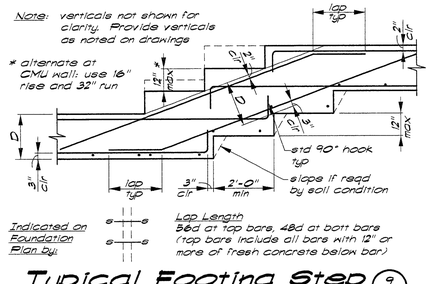

Typical Footing Step (9/S1.02)

3305010-32

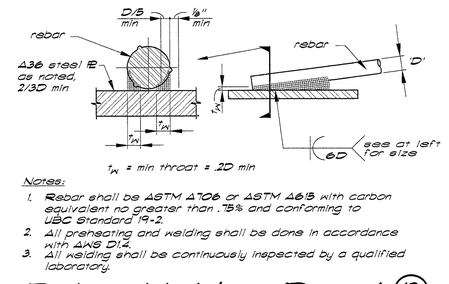

t_W = min throat = 2D min

Notes:
1. Rebar shall be ASTM A706 or ASTM A615 with carbon equivalent no greater than .75% and conforming to UBC Standard 19-2.
2. All prehearing and welding shall be done in accordance with AWS D1.2.
3. All welding shall be continuously inspected by a qualified laboratory.

Rebar Welding Detail (10/S1.02)

3305002-32

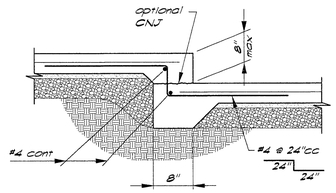

Typical Step in Slab (11/S1.02)

3305018-12

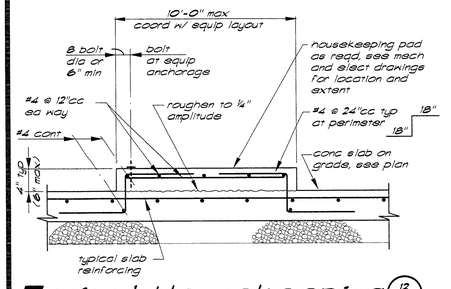

Typical Housekeeping Pad at Slab on Grade (12/S1.02)

3305017-16

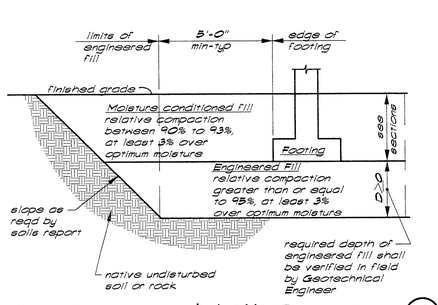

Engineered Fill Section (13/S1.02)

3305013-32

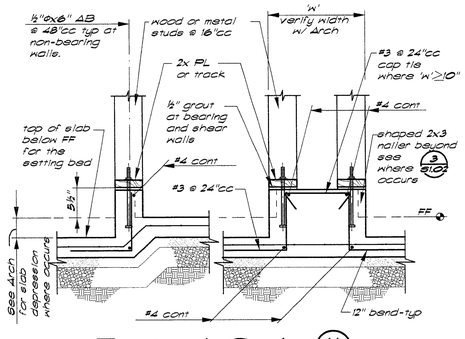

Typical Curb (14/S1.02)

Δ at slab depression and double wall

3305012-12

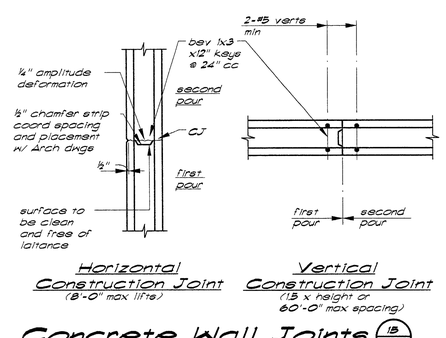

Horizontal Construction Joint (8'-0" max lifts)

Vertical Construction Joint (1.5 x height or 60'-0" max spacing)

Concrete Wall Joints (15/S1.02)

3305011-32

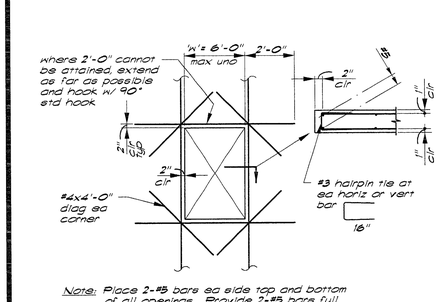

Note: Place 2-#5 bars ea side top and bottom of all openings. Provide 2-#5 bars full height vertical each side of opening with matching footing dowels.

Opening Reinforcing In Concrete Walls (16/S1.02)

3305014-32

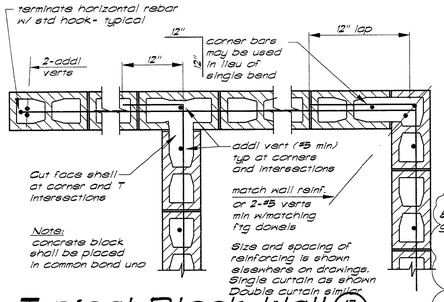

Typical Block Wall Reinforcing at Corners and Intersections (17/S1.02)

4205002-12

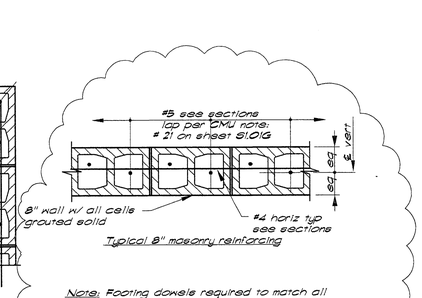

Note: Footing dowels required to match all vertical reinforcing.

Typical Block Wall Reinforcing (18/S1.02)

4205003-12 Δ3

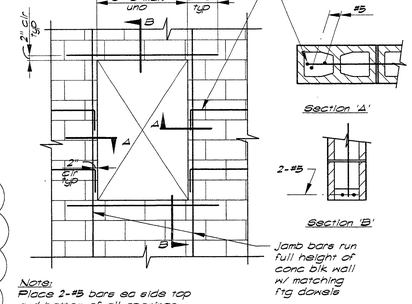

Notes:
Place 2-#5 bars ea side top and bottom of all openings.
Top & bottom bars shall not be spliced.

Opening Reinforcing at CMU Wall Openings (19/S1.02)

4205001-12

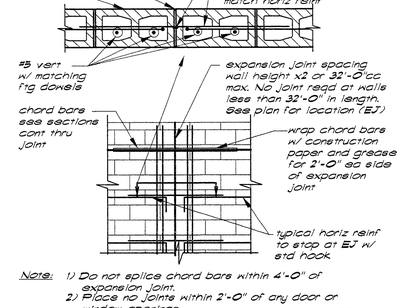

Note: 1) Do not splice chord bars within 4'-0" of expansion joint.
2) Place no joints within 2'-0" of any door or window openings.

Typical Block Wall Expansion Joint (20/S1.02)

4205004-12

PLANS REVIEWED BY
Precision Inspection Company
Inspection and Consulting Services
Page 24 Of 194

This set of plans and specifications MUST be kept on the job at all times and is subject to return upon demand by the City of Stockton. It is unlawful to use or reproduce these plans and specifications or copies thereof without written permission from the Building Inspection, City of Stockton.
APPROVED Date
By Permit No.
The stamping of this plan and specifications shall not be held to permit or to be an approval of the violation of any provision of any City Ordinance or Law. Occupancy of buildings may not be granted until final approval.

ENGLISH HARPER RETA
ARCHITECTS

580 UNIVERSITY AVENUE SUITE 100
SACRAMENTO, CA 95825 (916) 568-1821

THIS DRAWING IS NOT FINAL OR TO BE USED FOR CONSTRUCTION UNTIL IT IS SIGNED BY THE ARCHITECT AND THE OWNER.

ARCHITECT
EDWARD P. ENGLISH C-10399
RICHARD L. HARPER C-13830
RONALD A. RETA C- 9879

OWNER

CONTRACTOR

Turner Construction Company

BUEHLER & BUEHLER ASSOCIATES
STRUCTURAL ENGINEERS, INC.
7300 Folsom Blvd., Suite 103
Sacramento, Ca. 95826
(916) 381-8181

REGISTERED PROFESSIONAL ENGINEER LAWRENCE E. JONES No. SE 3138 Exp. 12/31/01 STRUCTURAL STATE OF CALIFORNIA

CONFORMED COPY

Essential Services Facility (UNDER SEPARATE DOCUMENT PACKAGE)

Parking Garage

KEY PLAN

DATE	NO.	DESCRIPTION
1/13/00	3	Overall Permit Set
11/15/99	2	Progress Set
10/18/99	1	Progress Set

REVISIONS

DRAWN BY
MAR

CHECKED BY
LEJ

Parking Garage
City of Stockton, California
FOUNDATION RE-DESIGN SET

DRAWING

TYPICAL DETAILS
-
-

PROJECT NO. 98113
DRAWING NO. S1.02G
CADFILE S1_02.dwg
DATE 07 SEPTEMBER 1999

F:\JOBS\98\S1_02.dwg 01/31/00 15:55:59 Mark A. R.

TYPICAL DETAILS

APPLICABLE TO ALL DRAWINGS UNLESS NOTED OR SHOWN OTHERWISE

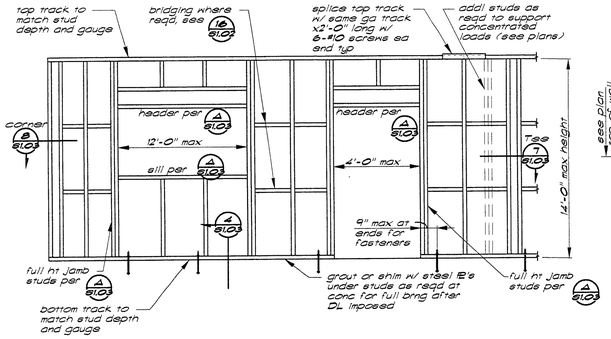

Note: 1. All studs and tracks shall be 6"x18ga unO

Typical Metal Stud Wall Elevation 1/21.0C3

S4025100-32

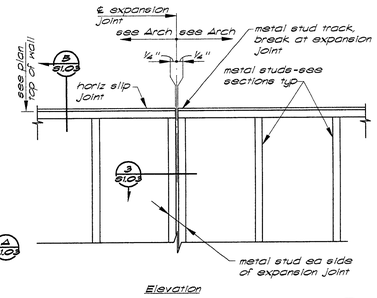

Elevation

Metal Stud Expansion Joints 2/21.0C3

S4050125-12

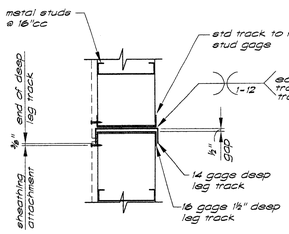

Expansion Joint Detail 3/21.0C3

S4050126-12

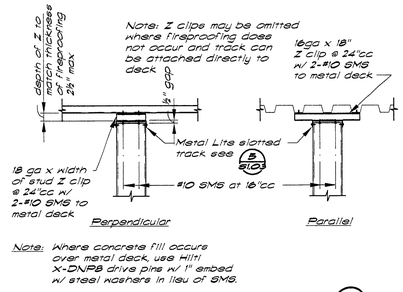

Note: Where concrete fill occure over metal deck, use Hilti X-DNPB drive pins w/ 1" embed w/ steel washers in lieu of SMS.

Slip Track to Metal Deck w/ Fireproofing 4/21.0C3

S4052211-12

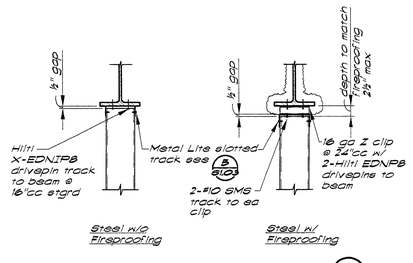

Slip Track to Steel Beam 4A/21.0C3

S4052218-12

S4051013-4

Wall Opening Framing Schedule 4/21.0C3

'W' Width max	Jambs	Header	Sill
4'-0"	dbl stud 6/21.0C3	track & stud 9/21.0C3	track 12/21.0C3
8'-0"	dbl stud 6/21.0C3	2 tracks & stud 10/21.0C3	track & stud 13/21.0C3
12'-0"	triple stud 6/21.0C3	3 tracks & 2 studs 11/21.0C3	2 tracks & stud 14/21.0C3

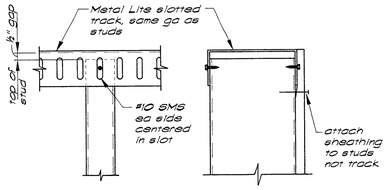

Note: See 4/60.3 and 4A/60.3 for attachment of track to structure.

Detail 5/21.0C3

S4052213-4

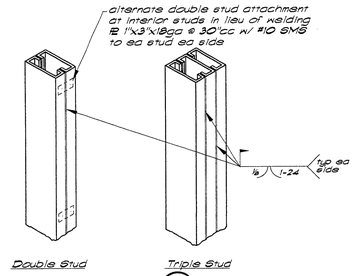

Detail 6/21.0C3

S4050107-12

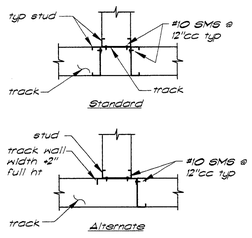

Note: See plans and sections for stud and track sizes.

Typical Tee Intersection 7/21.0C3

S4052204-12

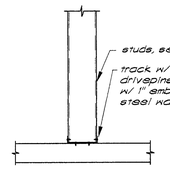

Typical Sill Track to Concrete 8/21.0C3

S4052211-12

Wall Stud Schedule

Height	Stud
0 to 10'-1"	4" x 20 ga @ 16"cc
10'-2" to 11'-1"	4" x 18 ga @ 16"cc
11'-2" to 14'-0"	6" x 18 ga @ 16"cc

Note: all studs are IC type with 1¼" flanges

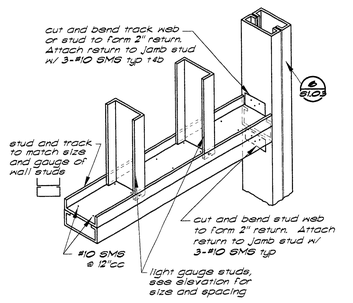

Header Detail 9/21.0C3

S4050113-12

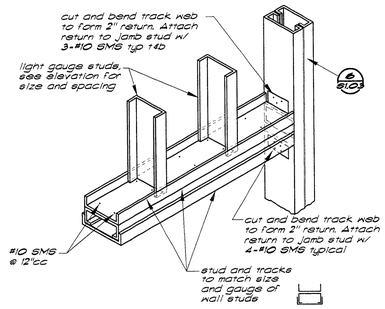

Header Detail 10/21.0C3

S4050114-12

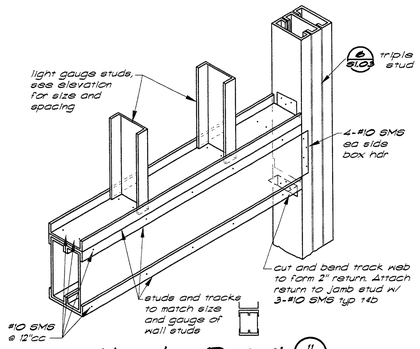

Header Detail 11/21.0C3

S4050115-12

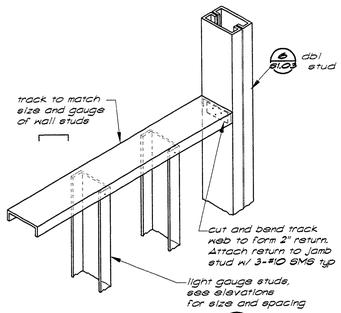

Sill Detail 12/21.0C3

S4050116-12

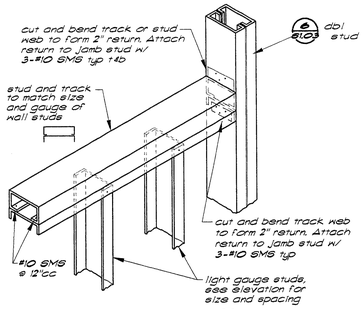

Sill Detail 13/21.0C3

S4050109-12

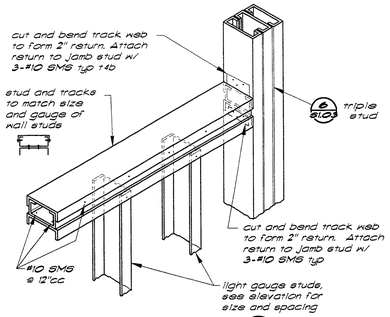

Sill Detail 14/21.0C3

S4050110-12

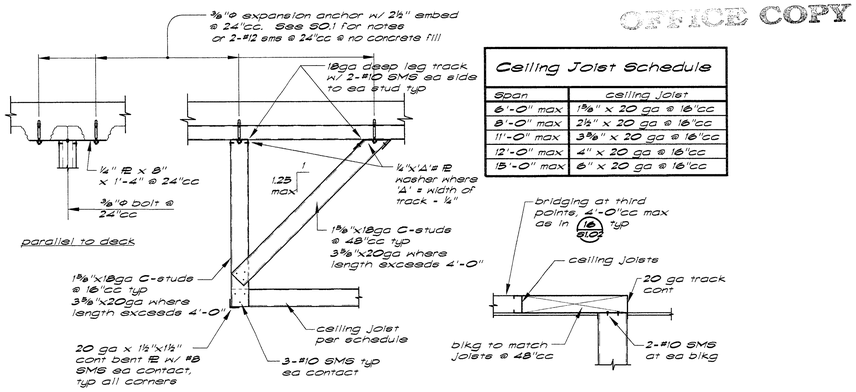

Typical Hanging Soffit

Typical Condition at Parallel Wall

Ceiling Joist Schedule

Span	ceiling joist
6'-0" max	1⅝" x 20 ga @ 16"cc
8'-0" max	2½" x 20 ga @ 16"cc
11'-0" max	3⅝" x 20 ga @ 16"cc
12'-0" max	4" x 20 ga @ 16"cc
15'-0" max	6" x 20 ga @ 16"cc

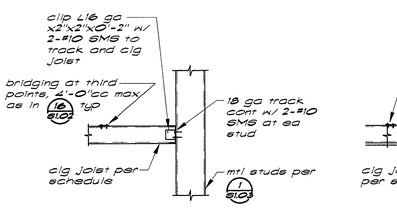

Typical Ledger Condition

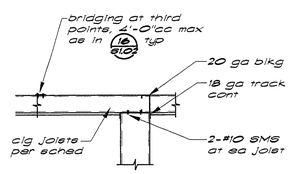

Typical Condition at Bearing Wall

Interior Framed Ceiling Details 15/21.0C3

S4052250-12

This set of plans and calculations MUST be kept on the job at all times and is subject to job site spot checks for conformance with the approved plans. Field changes or deviations require approval from Building Inspection, City of Stockton.

APPROVED Date _____

By _____ Permit No. _____

The stamping of this plan and/or specification shall NOT be held to permit or to be an approval of the violation of any provisions of any City Ordinance or Law. Occupancy of structure not permitted until Final approval.

OFFICE COPY

PLANS REVIEWED BY Precision Inspection Company Inspection and Consulting Services

Page 25 Of 119

ENGLISH HARPER RETA
ARCHITECTS

580 UNIVERSITY AVENUE SUITE 100
SACRAMENTO, CA 95825 (916) 568-1821

THIS DRAWING IS NOT FINAL OR TO BE USED FOR CONSTRUCTION UNTIL IT IS SIGNED BY THE ARCHITECT AND THE OWNER.

ARCHITECT
EDWARD P. ENGLISH C-10399
RICHARD L. HARPER C-13830
RONALD A. RETA C- 9879

OWNER

CONTRACTOR

Turner Construction Company

BUEHLER & BUEHLER ASSOCIATES
STRUCTURAL ENGINEERS, INC.
7300 Folsom Blvd., Suite 103
Sacramento, Ca. 95826
(916) 381-8181

REGISTERED PROFESSIONAL ENGINEER LAWRENCE E. JONES No. SE 3138 Exp. 12/31/01 STRUCTURAL STATE OF CALIFORNIA

Essential Services Facility (UNDER SEPARATE DOCUMENT PACKAGE)

Parking Garage

KEY PLAN

DATE	NO.	DESCRIPTION
1/13/00	3	Overall Permit Set
11/15/99	2	Progress Set
10/18/99	1	Progress Set

REVISIONS
DRAWN BY MAR
CHECKED BY LEJ

Parking Garage
City of Stockton, California
FOUNDATION RE-DESIGN SET

DRAWING
TYPICAL DETAILS

PROJECT NO. 98113
DRAWING NO. S1.03G
CADFILE S1_03.DWG
DATE 07 SEPTEMBER 1999

F:\98\98200\Garage\S1_03.dwg 01/11/00 16:36 Mark A. R.

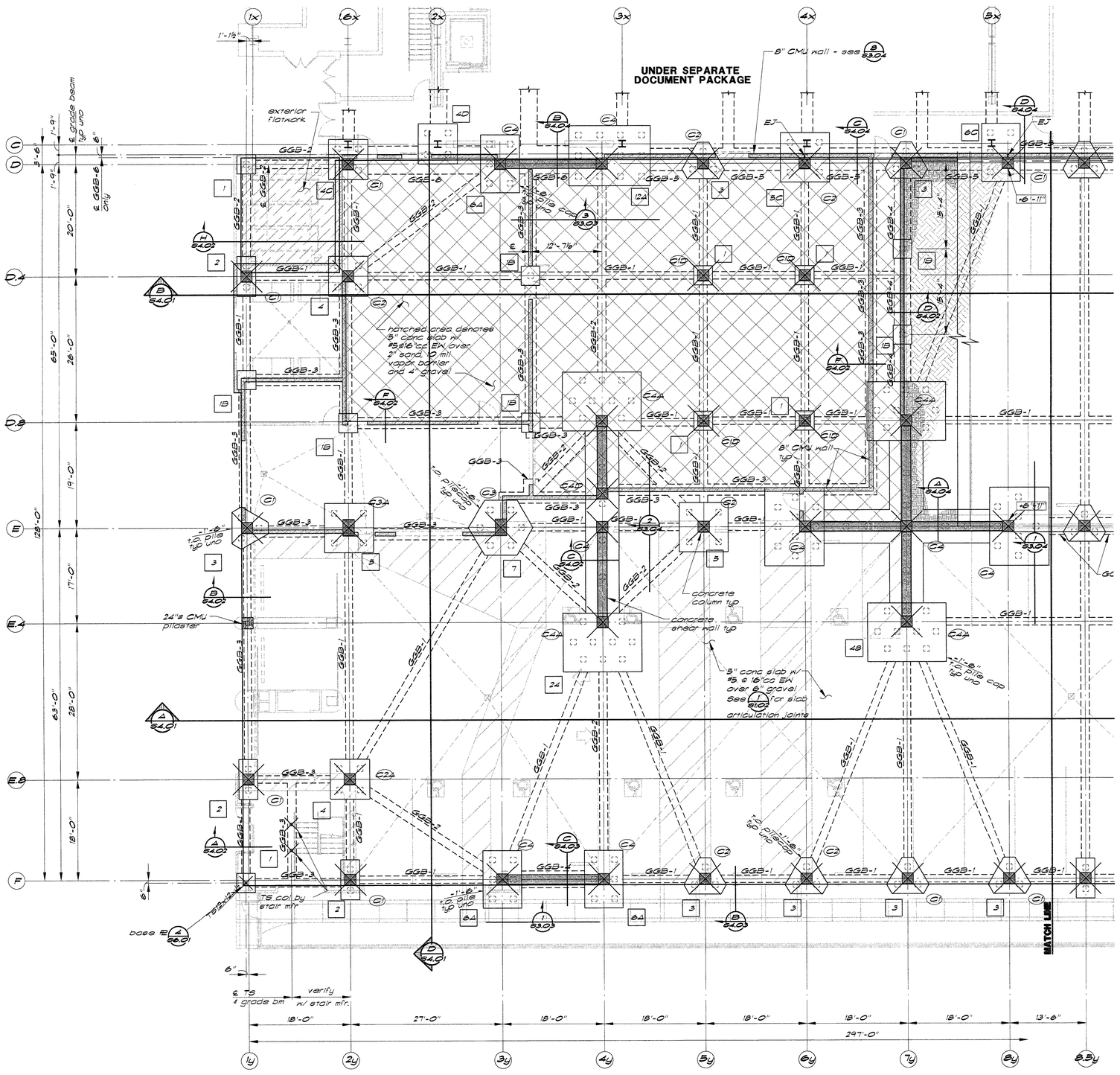

Foundation and Ground Level Slab Plan (West) — 1/8"=1'-0"

Notes:

1. Site preparation and building pad construction to be done in accordance with Soils Report #5150.001 by Geomatrix Consultants dated 9/1999. Extend engineered fill 5'-0" minimum laterally past the edge of footings. Driven piles shall be approved by Geotechnical Engineer prior to placement of reinforcing steel in pilecaps.
2. (C1) Indicates column type-see schedule 1/S3.02
3. GGB-1 indicates grade beam size & reinforcing-see schedule 4/S3.03
4. 2 indicates pilecap schedule - see sheet S3.01
5. +1'-0" Indicates elevation of top of finished slab from reference finished floor +0'-0" = 11.80' datum. See Arch'l drawings for ground floor finished slab elevations.
6. -1'-6" indicates elevation of top of pilecap below reference t.o. pilecap finished floor +0'-0".
7. All concrete wall above ground level shall be delayed 30 days from stressing of level above
8. Verify all dimensions with architectural drawings. Notify Architect of any discrepancies for resolution prior to proceeding. Dimensions are to center of column u.n.o.
9. See architectural drawings for door and window details, and locations, blockouts at door closers, curbs, depressions, pedestal dimensions, slopes and other like items.
10. See architectural drawings for exterior flatwork, planters, curbs, etc.
11. Verify elevator pit dimensions w/ elevator manufacturer prior to construction.
12. Provide 3" minimum concrete cover at base PL's and AB's below grade typ.
13. See metal stair design notes sheet S1.01 and Arch'l for stair dimensions
14. Indicates 8" CMU wall
15. Indicates concrete wall

This set of plans and calculations MUST be kept on the job at all times and it is unlawful to make any changes or alterations on same without written permission from Building Inspection, City of Stockton.

APPROVED Date _____

By _____ Permit No. _____

The stamping of this plan and specifications SHALL NOT be held to permit or to be an approval of the violation of any provisions of any Ordinance or Law. Occupancy of structure not permitted until after final approval.

OFFICE COPY

PLANS REVIEWED BY
Precision Inspection Company
Inspection and Consulting Services
Page 26 of 179

ENGLISH HARPER RETA
ARCHITECTS

580 UNIVERSITY AVENUE SUITE 100
SACRAMENTO, CA 95825 (916) 568-1821

THIS DRAWING IS NOT FINAL OR TO BE USED FOR CONSTRUCTION UNTIL IT IS SIGNED BY THE ARCHITECT AND THE OWNER.

ARCHITECT
EDWARD P. ENGLISH C-10399
RICHARD L. HARPER C-13830
RONALD A. RETA C- 9879

OWNER

CONTRACTOR

Turner Construction Company

BUEHLER & BUEHLER ASSOCIATES
STRUCTURAL ENGINEERS, INC.
7300 Folsom Blvd., Suite 103
Sacramento, Ca. 95826
(916) 381-8181

REGISTERED PROFESSIONAL ENGINEER
LAWRENCE E. JONES
No. SE 3138
Exp. 12/31/01
STRUCTURAL
STATE OF CALIFORNIA

Essential Services Facility
(UNDER SEPARATE DOCUMENT PACKAGE)
Parking Garage

KEY PLAN

DATE	NO.	DESCRIPTION
1/13/00	3	Overall Permit Set
11/15/99	2	Progress Set
10/18/99	1	Progress Set

REVISIONS

DRAWN BY
JBM

CHECKED BY
TDO

Parking Garage
City of Stockton, California
FOUNDATION RE-DESIGN SET

DRAWING
Foundation and Ground Level Slan Plan (West)

PROJECT NO. 98113
DRAWING NO. S2.01G
CADFILE
DATE 24 SEPTEMBER 1999

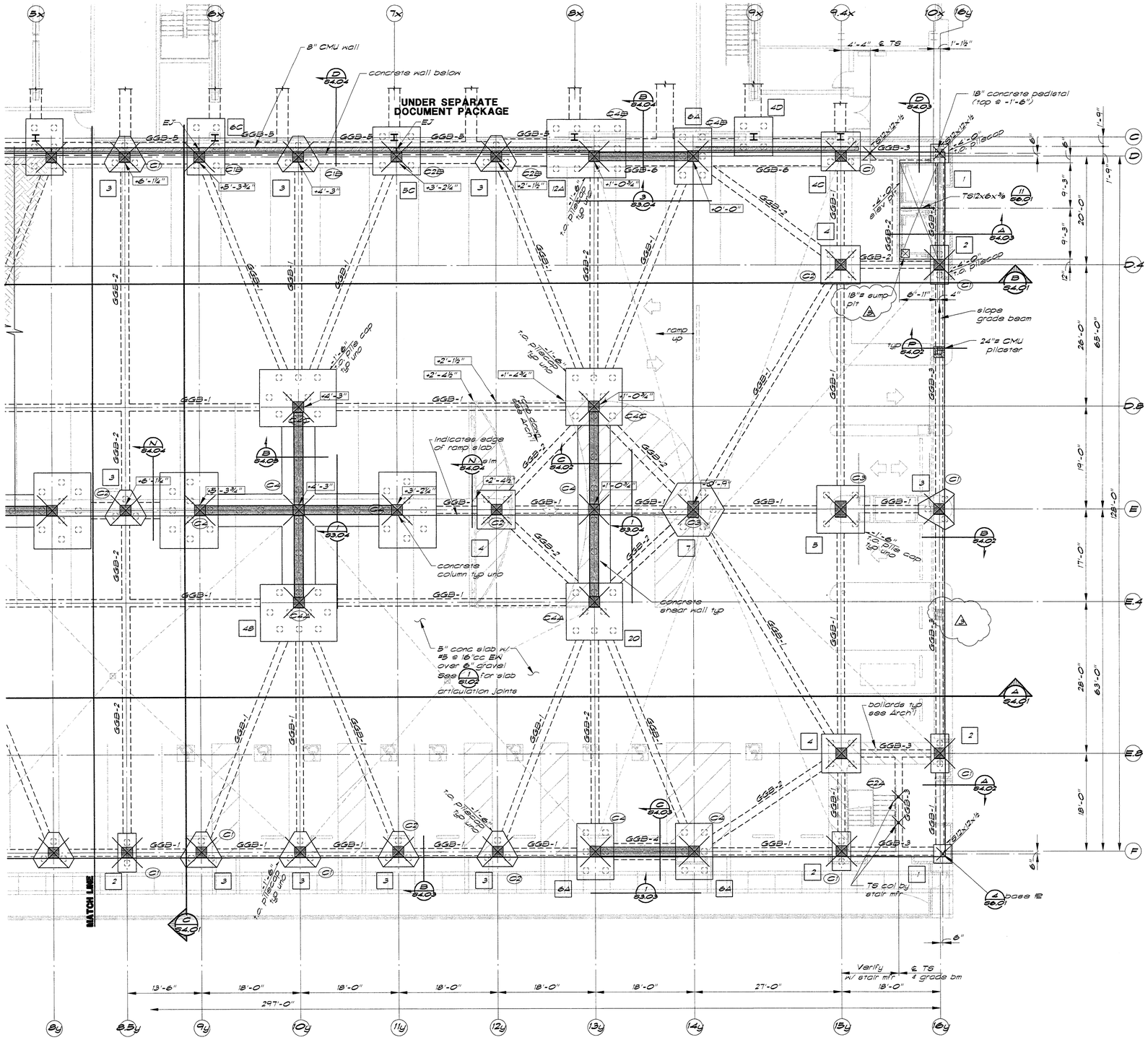

Foundation and Ground Level Slab Plan (East) — 1/8"=1'-0"

Foundation Notes:

1. See sheet S2.01 for typical foundation notes.

This set of plans and calculations MUST be kept on the job at all times and it is unlawful to make any changes or alterations on same without written permission from Building Inspection, City of Stockton.

APPROVED Date _____ Permit No. _____

By _____

The stamping of this plan and specifications SHALL NOT be held to permit or to be an approval of the violation of any provisions of any Ordinance or Law. Occupancy of [illegible] after final approval.

OFFICE COPY

PLANS REVIEWED BY
Precision Inspection Company
Inspection and Consulting Services
Page 37 Of 79

ENGLISH HARPER RETA
ARCHITECTS

580 UNIVERSITY AVENUE SUITE 100
SACRAMENTO, CA 95825 (916) 568-1821

THIS DRAWING IS NOT FINAL OR TO BE USED FOR CONSTRUCTION UNTIL IT IS SIGNED BY THE ARCHITECT AND THE OWNER.

ARCHITECT
EDWARD P. ENGLISH C-10399
RICHARD L. HARPER C-13830
RONALD A. RETA C- 9879

OWNER

CONTRACTOR

Turner Construction Company

BUEHLER & BUEHLER ASSOCIATES
STRUCTURAL ENGINEERS, INC.
7300 Folsom Blvd., Suite 103
Sacramento, Ca. 95826
(916) 381-8181

REGISTERED PROFESSIONAL ENGINEER
LAWRENCE E. JONES
No. SE 3138
Exp. 12/31/01
STRUCTURAL
STATE OF CALIFORNIA

KEY PLAN

DATE	NO.	DESCRIPTION
1/13/00	3	Overall Permit Set
11/15/99	2	Progress Set
10/18/99	1	Progress Set

REVISIONS

DRAWN BY
JMB

CHECKED BY
TDO

Parking Garage
City of Stockton, California
FOUNDATION RE-DESIGN SET

DRAWING
Foundation and Ground Level Slab Plan (East)
-

PROJECT NO. 98113
DRAWING NO. S2.02G
CADFILE -
DATE 24 SEPTEMBER 1999

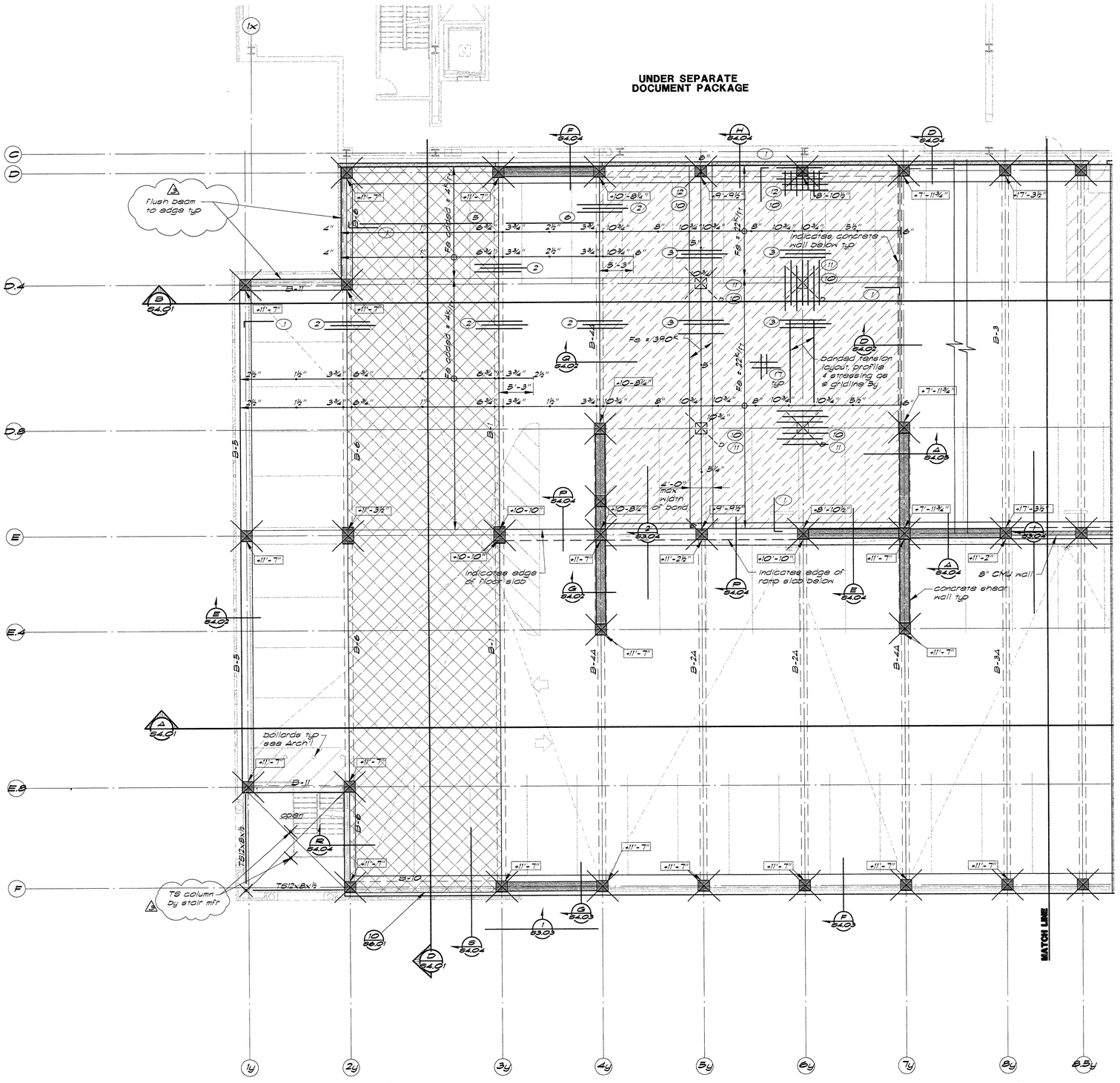

2nd Floor Framing Plan (West) — 1/8"=1'-0"

Plan Notes:

1. 11'-0" Indicates elevation of top of structural slab above reference finished floor +0'-0".
2. See sheets S2.01G & S2.02G for column mark sizes.
3. B-1 Indicates beam elevation reference see schedule (1/S2.03)
4. For slab mild reinforcing, see (2/S2.03) key notes. Mild reinforcing shown on sheets S2.07G & S2.08G applies to all elevated slabs, uno. Place steel 1" clear from slab edge top, ¾" clear bottom.
5. (T) Indicates top reinforcing, (B) Indicates bottom reinforcing.
6. Post-tensioning shown on sheets S2.05G & S2.06G applies to all elevated slabs, uno. See sheet S5.01G for typical post-tensioning notes and details.
7. Shaded area indicates 60 day delay slab closure pour.
8. Contractor to submit any additional construction joint layout and details to Structural Engineer for approval.
9. Typical concrete slab shall be 5" thick.
10. Indicates 8" thick concrete slab.
11. Indicates 12" thick concrete slab.

(1/S2.03) Beam Elevation Sched.

Mk.	Size	Elevation
B-1	18" x 36"	1/S5.04
B-2/B-2A	14" x 36"	2/S5.04
B-3/B-3A	14" x 36"	2/S5.04
B-4/B-4A	18" x 36"	3/S5.04
B-5	24" x 36"	1/S5.05
B-6	18" x 36"	4/S5.04
B-7	18" x 36"	2/S5.05
B-8	18" x 36"	3/S5.05
B-9	18" x 36"	4/S5.05
B-10	24" x 24"	5/S5.05
B-11	12" x 24"	6/S5.05

(2/S2.03) Slab Reinforcing Key Notes:

1. (T) #5 @ 18"cc
2. (T) #5 x 12'-0" @ 9"cc w/ 1'-0" stagger
3. (T) #5 x 9'-0" @ 24"cc w/ 1'-0"
4. (T) #5 x 9'-0" @ 18"cc w/ 1'-0" stagger
5. (B) #5 @ 12"cc
6. (B) #5 @ 24"cc
7. 9 unbonded strands per bay @ center of slab (26.8 k/strand) -typ lines 2y to 3y and 14y to 15y see (5/S2.03) for temp reinforcing
8. 4 unbonded strands per bay @ center of slab (26.8 k/strand) - typ lines 1y to 2y, 3y to 14y and 15y to 16y (except @ 12" slab on 2nd floor. See (5/S2.03) for temp reinforcing
9. (T) #5 @ 18"cc
10. (T) 7-#5 x 9'-0" in uniform direction. Layout per (5/S2.03) or (6/S2.03)
11. (T) 9-#5 x 9'-0" in banded direction. Layout per (5/S2.03)
12. (T) 9-#5 in banded direction Layout per (6/S2.03) 5'-0"
13. Add'l 9-#9 @ 4"cc continuous. 7'-0" lap splice - stagger 50% 7'-0" min. Locate bars as shown in sections. Transition bars located in curb into the ℄ slab @ lines 4y & 13y.
14. Add'l 6-#9 @ 4"cc continuous. Lap splice as in (13)
15. Add'l reinforcing over all shearwalls - See sections.
16. Add'l 2-#6 @ 3"cc continuous from lines 1y to 3y & 14y to 16y. 6'-0" min. lap splice - stagger 6'-0" min. Locate bars @ ℄ slab - typ.
17. #5 @ 18"cc each way (B) @ 12" slab

This set of plans and calculations MUST be kept on the job at all times and it is unlawful to make any changes or alterations on same without the permission of the Building Inspection, City of Stockton.

APPROVED Date: Permit No.:

The stamping of this plan and specifications SHALL NOT be held to include or authorize the approval of the violation of any provision of any City Ordinance or Law. Occupancy of building not permitted until after final approval.

OFFICE COPY

PLANS REVIEWED BY Precision Inspection Company Inspection and Consulting Services

Page 00 Of

ENGLISH HARPER RETA
ARCHITECTS

580 UNIVERSITY AVENUE SUITE 100
SACRAMENTO, CA 95825 (916) 568-1821

THIS DRAWING IS NOT FINAL OR TO BE USED FOR CONSTRUCTION UNTIL IT IS SIGNED BY THE ARCHITECT AND THE OWNER.

ARCHITECT
EDWARD P. ENGLISH C-10399
RICHARD L. HARPER C-13830
RONALD A. RETA C- 9879

OWNER

CONTRACTOR

Turner Construction Company

BUEHLER & BUEHLER ASSOCIATES
STRUCTURAL ENGINEERS, INC.
7300 Folsom Blvd., Suite 103
Sacramento, Ca. 95826
(916) 381-8181

REGISTERED PROFESSIONAL ENGINEER LAWRENCE JONES No. SE 3138 Exp. 12/31/01 STRUCTURAL STATE OF CALIFORNIA

Essential Services Facility (UNDER SEPARATE DOCUMENT PACKAGE)

Parking Garage

KEY PLAN

DATE	NO.	DESCRIPTION
1/13/00	3	Overall Permit Set
11/15/99	2	Progress Set
10/18/99	1	Progress Set

REVISIONS

DRAWN BY
JBM

CHECKED BY
DTE

Parking Garage
City of Stockton, California
FOUNDATION RE-DESIGN SET

DRAWING
2nd Floor Framing Plan (West)
–

PROJECT NO. 98113
DRAWING NO. S2.03G
CADFILE –
DATE 07 SEPTEMBER 1999

F:\98113\CAD\Concept\S2_03.dwg 01/17/00 11:33 Mark A. R.

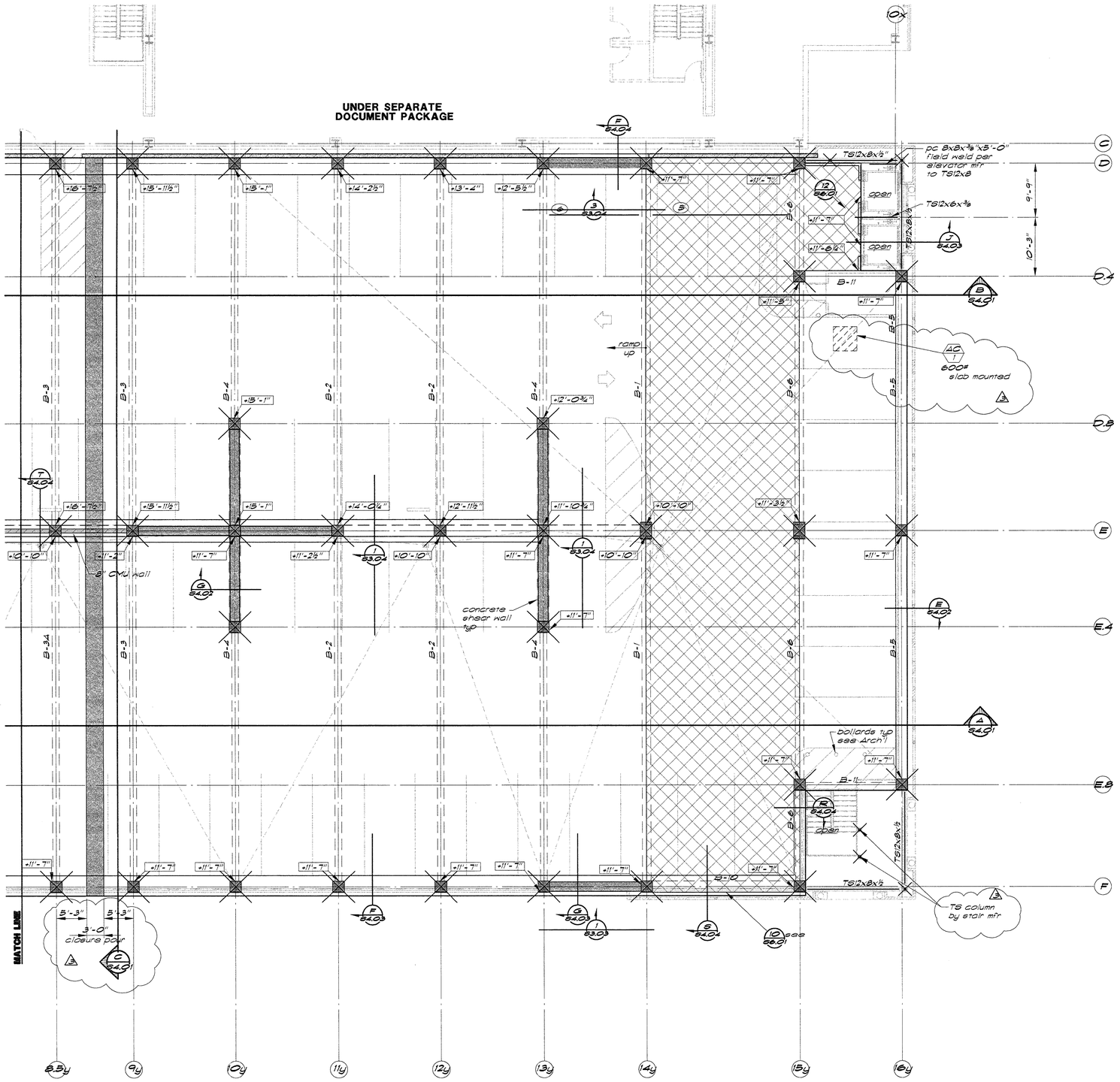

2nd Floor Framing Plan — ⅛"=1'-0"

Plan Notes:

1. See sheet S2.05 for typical plan notes.

This set of plans and specifications MUST be kept on the job at all times and is the property of the Architect and is not to be used in whole or in part for any other project without written authorization of the Architect. Visual contact with these plans shall constitute prima facie evidence of the acceptance of these restrictions. Copyright © 1999 English Harper Reta Architects

These plans shall not be used for bidding or construction purposes and shall not be loaned to any bidder or contractor without the express written permission of the Architect. Copyright Law. Copyright © 1999 English Harper Reta Architects

OFFICE COPY

ENGLISH HARPER RETA
ARCHITECTS

580 UNIVERSITY AVENUE SUITE 100
SACRAMENTO, CA 95825 (916) 568-1821

THIS DRAWING IS NOT FINAL OR TO BE USED FOR CONSTRUCTION UNTIL IT IS SIGNED BY THE ARCHITECT AND THE OWNER.

ARCHITECT
EDWARD P. ENGLISH C-10399
RICHARD L. HARPER C-13830
RONALD A. RETA C- 9879

OWNER

CONTRACTOR

Turner Construction Company

BUEHLER & BUEHLER ASSOCIATES
STRUCTURAL ENGINEERS, INC.
7300 Folsom Blvd., Suite 103
Sacramento, Ca. 95826
(916) 381-8181

REGISTERED PROFESSIONAL ENGINEER — LAWRENCE E. JONES — No. SE 3138 — Exp. 12/31/01 — STRUCTURAL — STATE OF CALIFORNIA

Essential Services Facility (UNDER SEPARATE DOCUMENT PACKAGE)

Parking Garage

KEY PLAN

DATE	NO.	DESCRIPTION
1/13/00	3	Overall Permit Set
11/15/99	2	Progress Set
10/18/99	1	Progress Set

REVISIONS

DRAWN BY
JMB

CHECKED BY
DTE

Parking Garage
City of Stockton, California
FOUNDATION RE-DESIGN SET

DRAWING
2nd Floor Framing Plan (East)
-

PROJECT NO. 98113

DRAWING NO. S2.04G

CADFILE S2_04.dwg

DATE 07 SEPTEMBER 1999

PLANS REVIEWED BY
Precision Inspection Company
Inspection and Consulting Services
Page 24 of 29

F:\1998\9813\Garage\S2_04.dwg 01/17/00 11:36 96 Mark A. R.

UNDER SEPARATE DOCUMENT PACKAGE

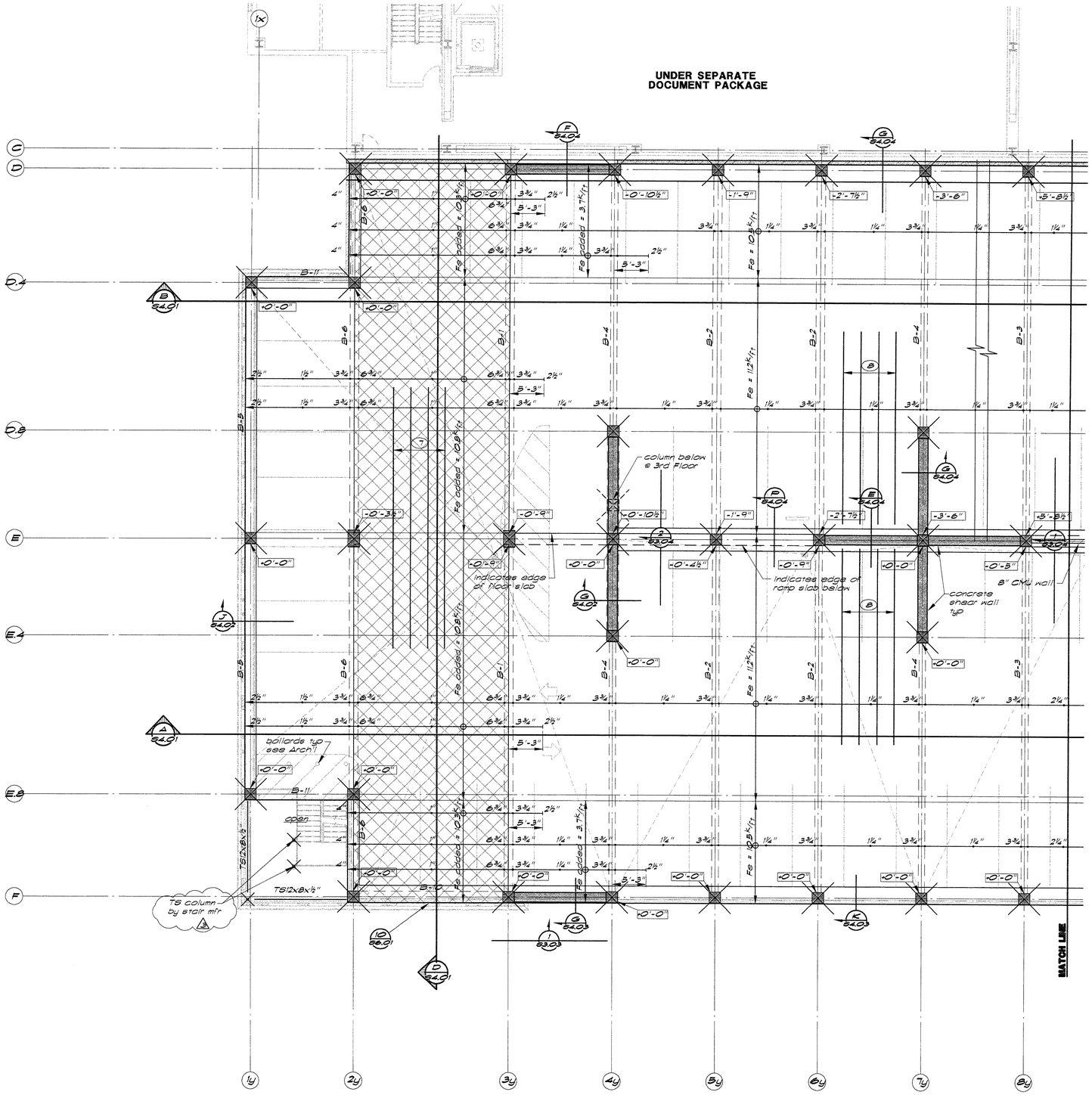

3rd thru 6th Floor Framing Plan (West) — 1/8"=1'-0"

Plan Notes:

1. See sheet S2.03 for typical plan notes.
2. +1'-0" indicates elevation of top of finished slab relative to individual floor base elevations:
   3rd Floor: +21'-8"
   4th Floor: +31'-9"
   5th Floor: +41'-10"
   6th Floor: +51'-11"
   (Base elevations from reference finish floor elevation +0'-0")

This set of plans and specifications MUST be kept on the job at all times and it is unlawful to make any changes or alterations on same without written consent from Building Inspection, City of Stockton.

By _____ Date _____

The stamping of this plan and specification SHALL NOT be held to permit or to be an approval of the violation of any provisions of any Ordinance or Law. Occupancy of structure not permitted until after final approval.

CONFORMED COPY

PLANS REVIEWED BY
Precision Inspection Company
Inspection and Consulting Services
Page 30 of 119

ENGLISH HARPER RETA
ARCHITECTS

580 UNIVERSITY AVENUE SUITE 100
SACRAMENTO, CA 95825 (916) 568-1821

THIS DRAWING IS NOT FINAL OR TO BE USED FOR CONSTRUCTION UNTIL IT IS SIGNED BY THE ARCHITECT AND THE OWNER.

ARCHITECT
EDWARD P. ENGLISH C-10399
RICHARD L. HARPER C-13830
RONALD A. RETA C- 9879

OWNER

CONTRACTOR

Turner Construction Company

BUEHLER & BUEHLER ASSOCIATES
STRUCTURAL ENGINEERS, INC.
7300 Folsom Blvd., Suite 103
Sacramento, Ca. 95826
(916) 381-8181

REGISTERED PROFESSIONAL ENGINEER
LAWRENCE E. JONES
No. SE 3138
Exp. 12/31/01
STRUCTURAL
STATE OF CALIFORNIA

Essential Services Facility (UNDER SEPARATE DOCUMENT PACKAGE)

Parking Garage

KEY PLAN

DATE	NO.	DESCRIPTION
1/13/00	3	Overall Permit Set
11/15/99	2	Progress Set
10/18/99	1	Progress Set

REVISIONS

DRAWN BY
JMB

CHECKED BY
TDO

Parking Garage
City of Stockton, California
FOUNDATION RE-DESIGN SET

DRAWING
3rd thru 6th Floor Framing Plan (West)
–

PROJECT NO. 98113
CADFILE –
DATE 07 SEPTEMBER 1999

DRAWING NO. S2.05G

F:\99900300\Garage\S2_05.dwg 01/17/00 11:37 96 Mark A. R.

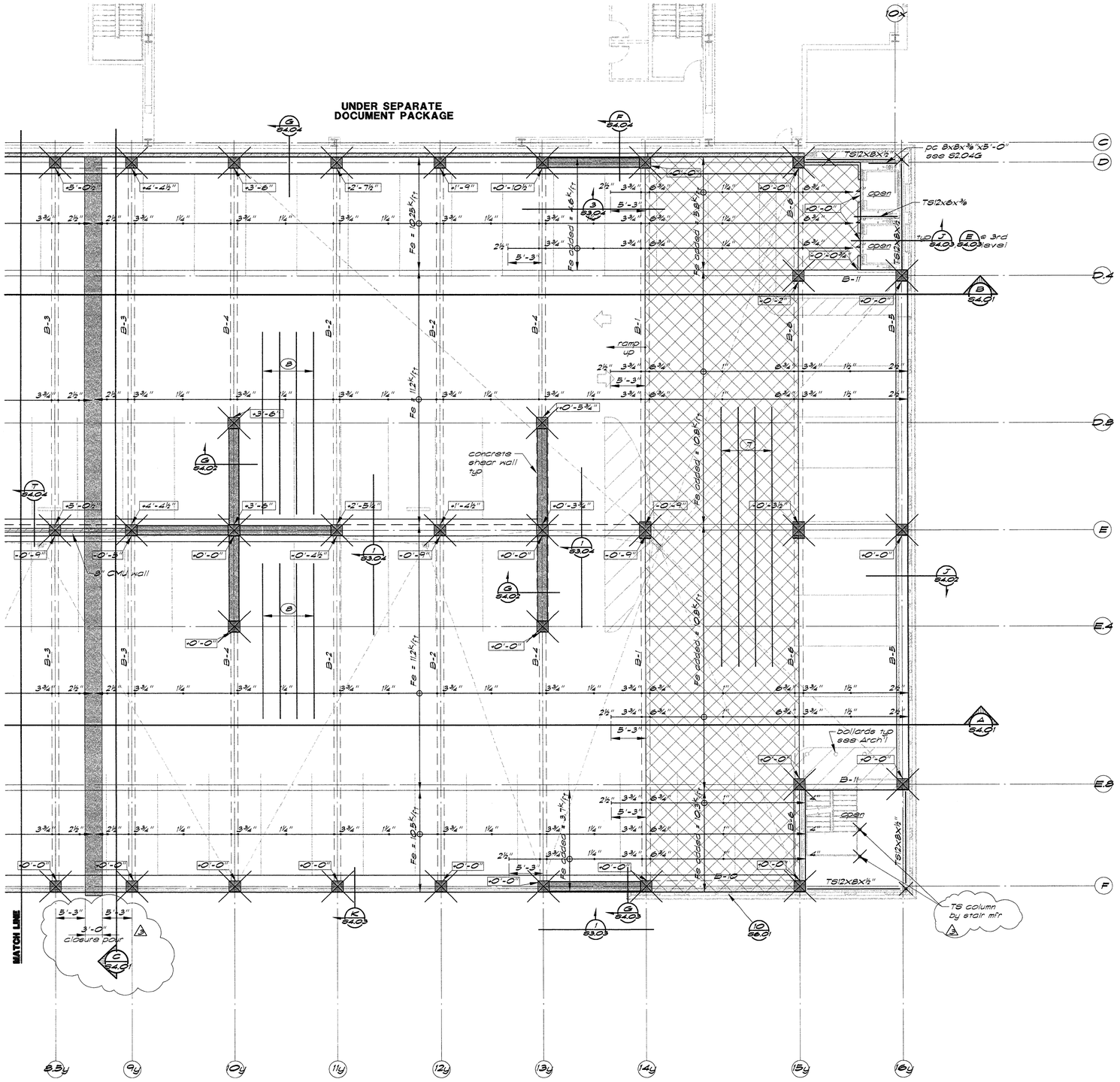

3rd thru 6th Floor Framing Plan — ⅛"=1'-0"

Plan Notes:

1. See sheet S2.05 for typical plan notes.

ENGLISH HARPER RETA
ARCHITECTS

580 UNIVERSITY AVENUE SUITE 100
SACRAMENTO, CA 95825 (916) 568-1821

THIS DRAWING IS NOT FINAL OR TO BE USED FOR CONSTRUCTION UNTIL IT IS SIGNED BY THE ARCHITECT AND THE OWNER.

ARCHITECT
EDWARD P. ENGLISH C-10399
RICHARD L. HARPER C-13830
RONALD A. RETA C- 9879

OWNER

CONTRACTOR

Turner Construction Company

BUEHLER & BUEHLER ASSOCIATES
STRUCTURAL ENGINEERS, INC.
7300 Folsom Blvd., Suite 103
Sacramento, Ca. 95826
(916) 381-8181

REGISTERED PROFESSIONAL ENGINEER — LAWRENCE E. JONES — No. SE 3138 — Exp. 12/31/01 — STRUCTURAL — STATE OF CALIFORNIA

Essential Services Facility (UNDER SEPARATE DOCUMENT PACKAGE)

Parking Garage

KEY PLAN

DATE	NO.	DESCRIPTION
1/13/00	3	Overall Permit Set
11/15/99	2	Progress Set
10/18/99	1	Progress Set

REVISIONS

DRAWN BY
JMB

CHECKED BY
TDO

CERTIFIED COPY

Parking Garage
City of Stockton, California
FOUNDATION RE-DESIGN SET

DRAWING
3rd thru 6th Floor Framing Plan (East)

PROJECT NO. 98113
DRAWING NO. S2.06G
CADFILE –
DATE 07 SEPTEMBER 1999

PLANS REVIEWED BY
Precision Inspection Company
Inspection and Consulting Services
Page 31 Of 79

F:\1998\98100\Garage\S2_06.dwg 01/17/00 11:39:46 Mark A. R.

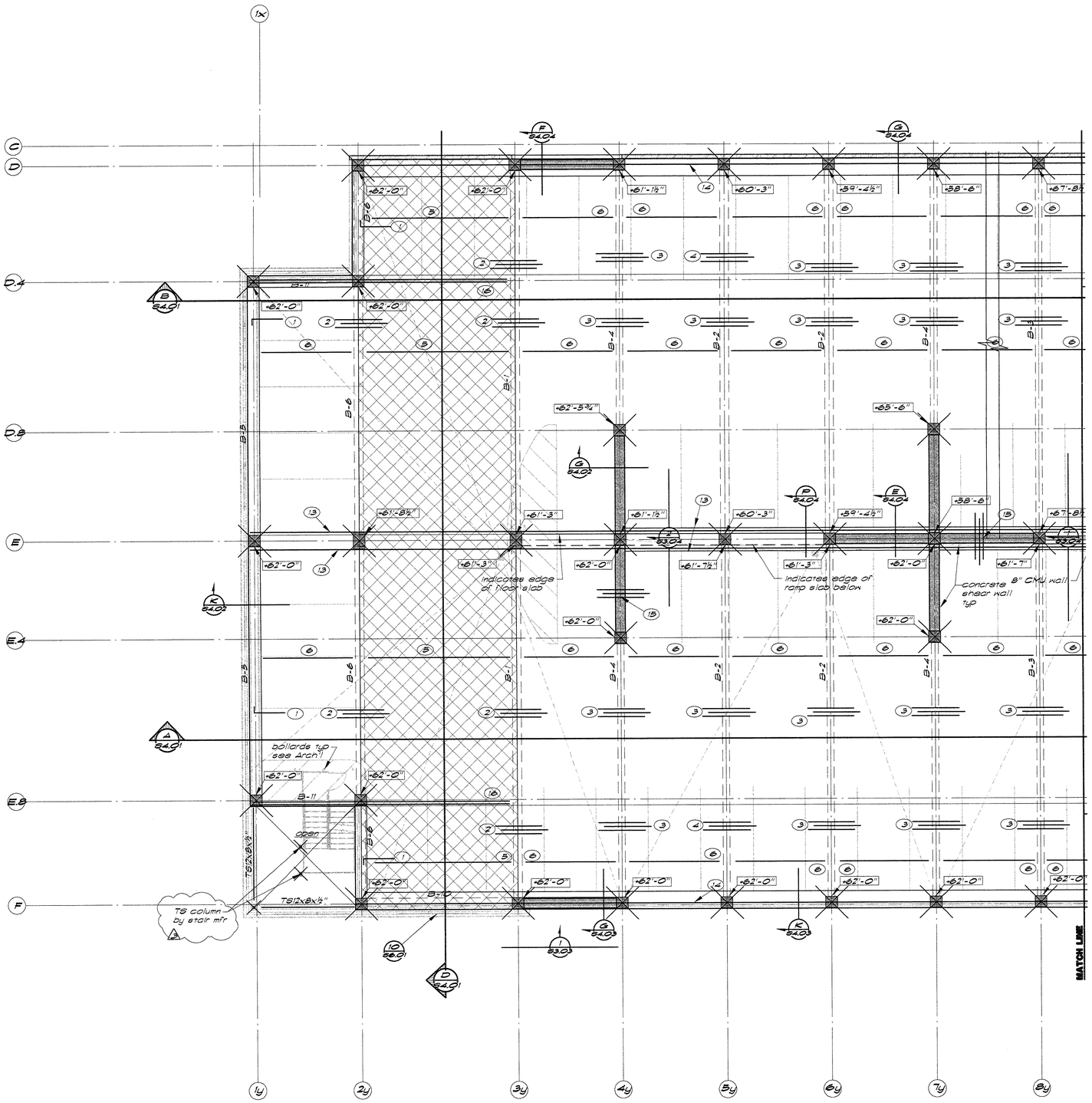

Plan Notes:

1. See sheet S2.03 for typical plan notes.

7th Floor Framing Plan (West) — 1/8"=1'-0"

ENGLISH HARPER RETA
ARCHITECTS

580 UNIVERSITY AVENUE SUITE 100
SACRAMENTO, CA 95825 (916) 568-1821

THIS DRAWING IS NOT FINAL OR TO BE USED FOR CONSTRUCTION UNTIL IT IS SIGNED BY THE ARCHITECT AND THE OWNER.

ARCHITECT
EDWARD P. ENGLISH C-10399
RICHARD L. HARPER C-13830
RONALD A. RETA C- 9879

OWNER

CONTRACTOR

Turner Construction Company

BUEHLER & BUEHLER ASSOCIATES
STRUCTURAL ENGINEERS, INC.
7300 Folsom Blvd., Suite 103
Sacramento, Ca. 95826
(916) 381-8181

REGISTERED PROFESSIONAL ENGINEER
LAWRENCE E. JONES
No. SE 3138
Exp. 12/31/01
STRUCTURAL
STATE OF CALIFORNIA

Essential Services Facility
(UNDER SEPARATE DOCUMENT PACKAGE)

Parking Garage

KEY PLAN

DATE	NO.	DESCRIPTION
1/13/00	2	Overall Permit Set
11/15/99	2	Progress Set
10/18/99	1	Progress Set

REVISIONS

DRAWN BY
JMB

CHECKED BY
DTE

Parking Garage
City of Stockton, California
FOUNDATION RE-DESIGN SET

DRAWING
7th Floor Framing Plan (West)

PROJECT NO. 98113
DRAWING NO. S2.07G
CADFILE
DATE 07 SEPTEMBER 1999

This [illegible] is the property of the Architect and is not to be used for any purpose other than the specific project for which it was prepared and is not to be loaned, copied or disclosed to any unauthorized person without the written permission of the Architect. Visual contact with these plans shall constitute prima facie evidence of acceptance of these restrictions. Dimensions on these plans shall take precedence over scaled measurements. Contractor shall verify and be responsible for all dimensions and conditions on the job. The Architect must be notified of any variations from the dimensions and conditions shown by these plans. Submission of alternate details or specifications must be approved by the Architect before commencement of any work affected thereby. Drawings are not to be scaled for quantities. Any ambiguities or conflicts discovered in these plans or between these plans and the site shall be reported to the Architect immediately for resolution. Contractor shall be responsible for all errors and omissions in the construction documents caused by his failure to report ambiguities or conflicts discovered by him or which should have been discovered by him. Contractor shall be responsible for all dimensions and conditions on the job. The Architect must be notified of any variations from the dimensions and conditions shown by these plans. Submission of alternate details or specifications must be approved by the Architect before commencement of any work affected thereby. Drawings are not to be scaled for quantities. Any ambiguities or conflicts discovered in these plans or between these plans and the site shall be reported to the Architect immediately for resolution. Contractor shall be responsible for all errors and omissions in the construction documents caused by his failure to report ambiguities or conflicts discovered by him or which should have been discovered by him.

OFFICE COPY

PLANS REVIEWED BY
Precision Inspection Company
Inspection and Consulting Services
Page 32 of 79

F:\Projects\Concept\S2_07.dwg 01/17/00 11:40:56 Mark A. R.

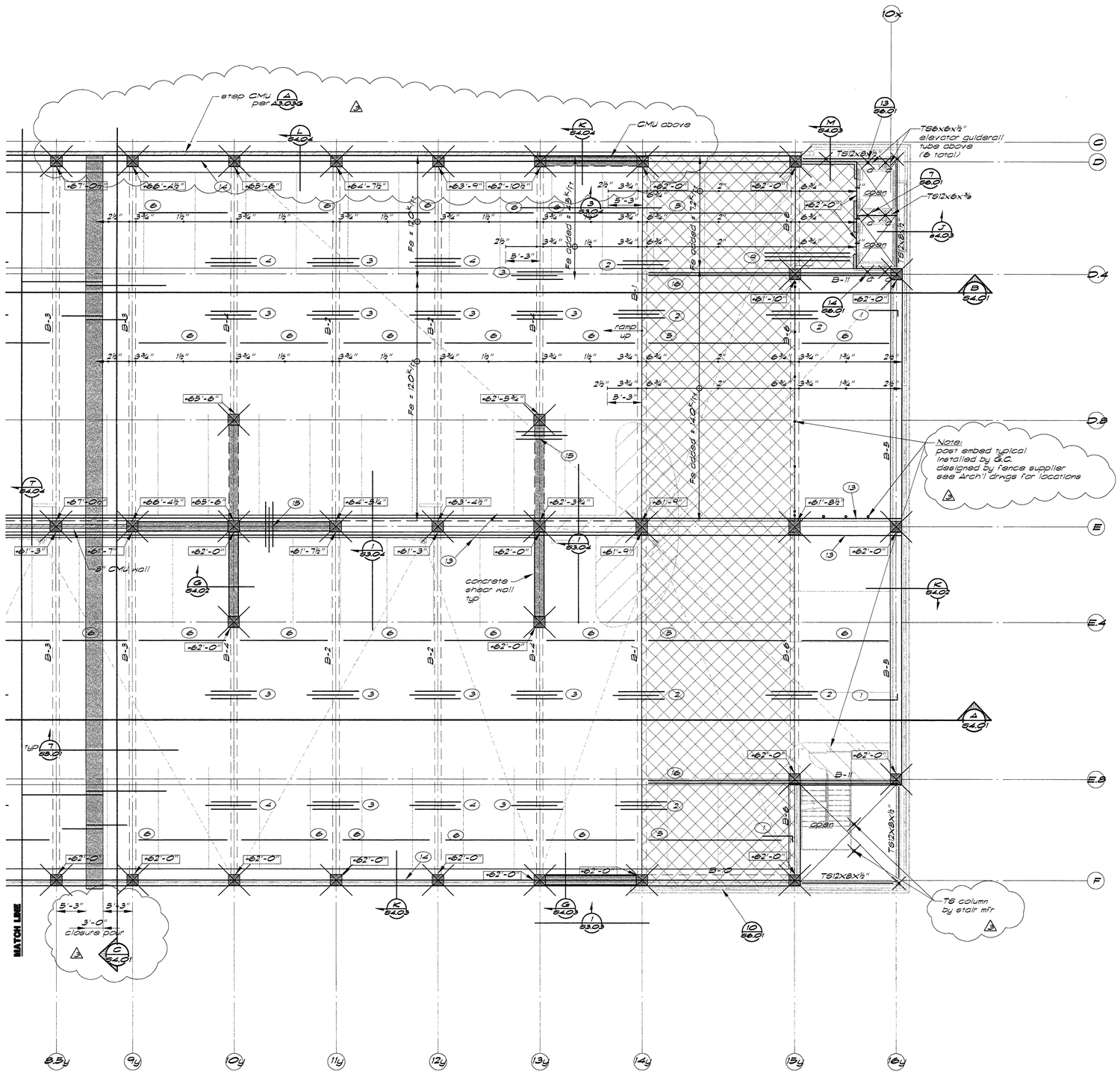

7th Floor Framing Plan (East) — 1/8"=1'-0"

Plan Notes:

1. See sheet s2.03 for typical plan notes.

ENGLISH HARPER RETA
ARCHITECTS

580 UNIVERSITY AVENUE SUITE 100
SACRAMENTO, CA 95825 (916) 568-1821

THIS DRAWING IS NOT FINAL OR TO BE USED FOR CONSTRUCTION UNTIL IT IS SIGNED BY THE ARCHITECT AND THE OWNER.

ARCHITECT
EDWARD P. ENGLISH C-10399
RICHARD L. HARPER C-13830
RONALD A. RETA C- 9879

OWNER

CONTRACTOR

Turner Construction Company

BUEHLER & BUEHLER ASSOCIATES
STRUCTURAL ENGINEERS, INC.
7300 Folsom Blvd., Suite 103
Sacramento, Ca. 95826
(916) 381-8181

REGISTERED PROFESSIONAL ENGINEER
LAWRENCE E. JONES
No. SE 3138
Exp. 12/31/01
STRUCTURAL
STATE OF CALIFORNIA

This drawing is the property of ... and is not to be used in any way without the permission of ... Drawings are not to be scaled for ... Contractor shall verify and be responsible for all dimensions and conditions on the job and shall notify ... of any discrepancies before proceeding with the work or fabrication of parts affected. Drawings are not to be used for construction purposes until signed by ...

by: _____

This ... is to be held to provide ... Architect or Engineer. Architect ... liability ... Contractor ... Architect of any Change Orders, Revisions, or Deviations ... final approved.

ORIGINAL COPY

Essential Services Facility (UNDER SEPARATE DOCUMENT PACKAGE)

Parking Garage

KEY PLAN

DATE	NO.	DESCRIPTION
1/13/00	2	Overall Permit Set
11/15/99	2	Progress Set
10/18/99	1	Progress Set

REVISIONS

DRAWN BY
JMB

CHECKED BY
DTE

Parking Garage
City of Stockton, California
FOUNDATION RE-DESIGN SET

DRAWING
7th Floor Framing Plan (East)

PROJECT NO. 98113
DRAWING NO. S2.08G
CADFILE –
DATE 07 SEPTEMBER 1999

PLANS REVIEWED BY
Precision Inspection Company
Inspection and Consulting Services
Page 33 of 104

F:\1998\8200\Garage\S2_08.dwg 07/17/00 11:43:56 Mark A. R.

Plan Notes:

1. See sheet S2.03 for typical plan notes.

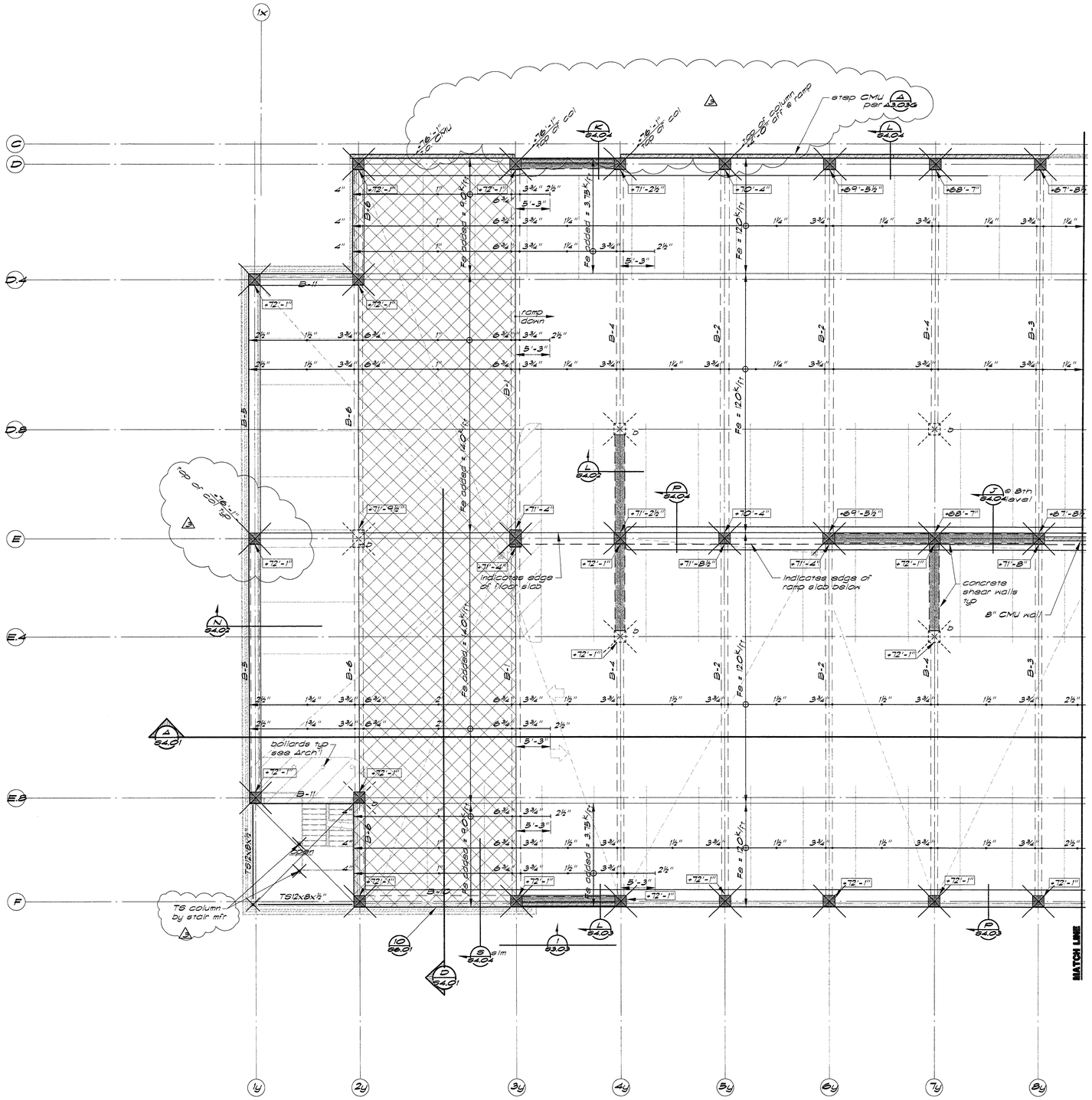

8th Floor Framing Plan (West) — 1/8"=1'-0"

This set of plans and specifications MUST be kept on the job site at all times it is under the control of the contractor. It is unlawful to make any changes or alterations on the plans or specifications without the permission of the architect. The visual contents of these documents are protected even after the completion of the project under the Architectural Works Copyright Protection Act of 1990. Unauthorized use of these plans and specifications without the permission of the architect is prohibited and is actionable under law.

This set of plans and specifications shall be kept on the job site at all times it is under the control of the contractor. It is unlawful to make any changes or alterations on the plans or specifications without the permission of the architect. The visual contents of these documents are protected even after the completion of the project under the Architectural Works Copyright Protection Act of 1990. Unauthorized use of these plans and specifications without the permission of the architect is prohibited and is actionable under law.

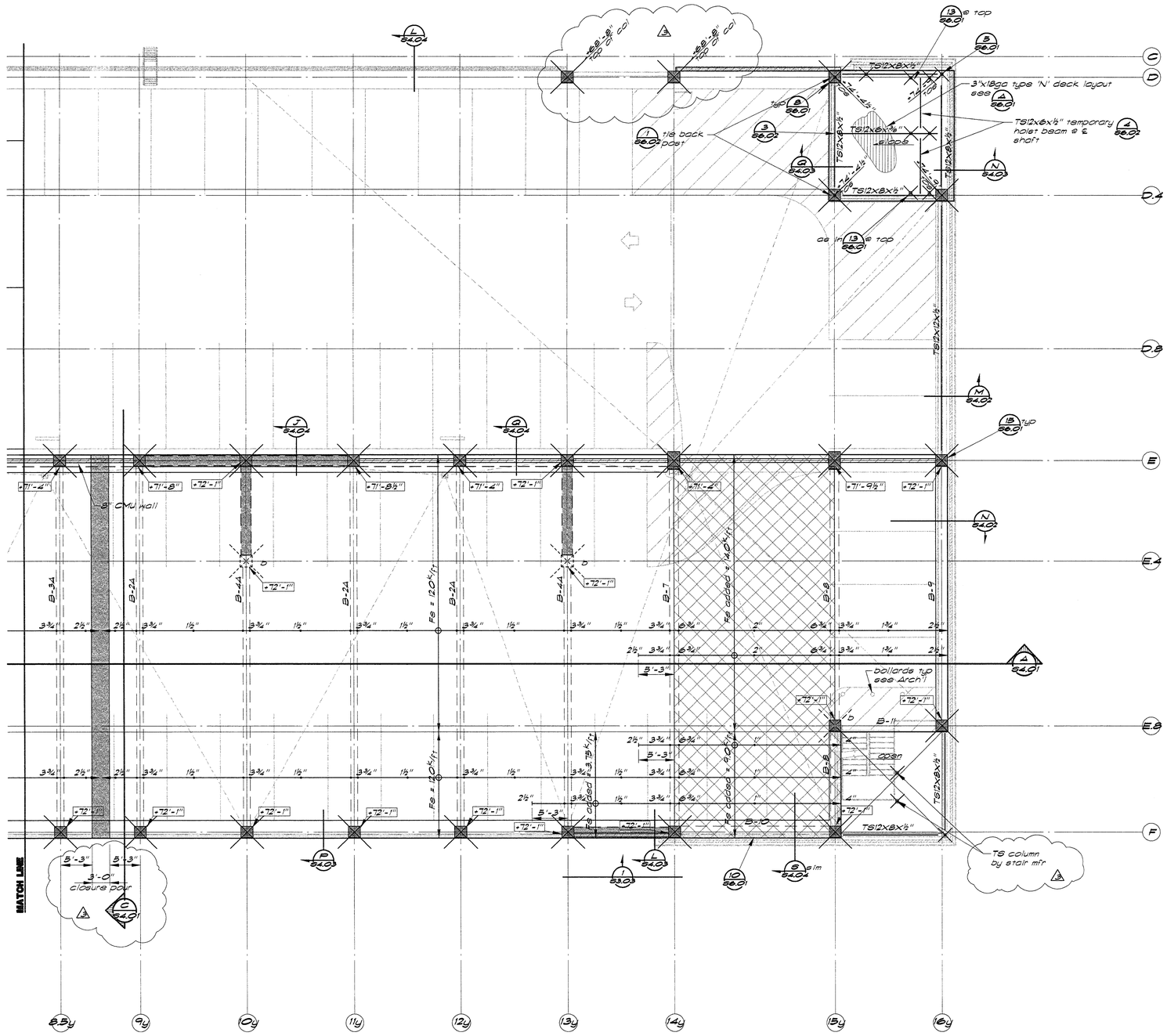

Plan Notes:

1. See sheet S2.03 for typical plan notes.

8th Floor Framing Plan (East) — ⅛"=1'-0"

This set of plans and specifications MUST be kept on the job site at all times and it is unlawful to make any changes or alterations on same. All work shall conform to applicable requirements of the Uniform Construction Code. The stamp of approval of this plan reviewing agency does not relieve the owner or his representative of responsibility for compliance with the Uniform Construction Code or other applicable laws. This approval is based on the applicant's representation that the plans and specifications comply with all applicable laws. Any omissions or misstatements shall void this approval. The approval shall not be held to permit or to be an approval of the violation of any provisions of any Ordinance or Law. Occupancy of structure not permitted until after final approval.

By _____

CONTROLLED COPY

PLANS REVIEWED BY
Precision Inspection Company
Inspection and Consulting Services
Page 35 Of 59

ENGLISH HARPER RETA
ARCHITECTS

580 UNIVERSITY AVENUE SUITE 100
SACRAMENTO, CA 95825 (916) 568-1821

THIS DRAWING IS NOT FINAL OR TO BE USED FOR CONSTRUCTION UNTIL IT IS SIGNED BY THE ARCHITECT AND THE OWNER.

ARCHITECT
EDWARD P. ENGLISH C-10399
RICHARD L. HARPER C-13630
RONALD A. RETA C- 9879

OWNER

CONTRACTOR

Turner Construction Company

BUEHLER & BUEHLER ASSOCIATES
STRUCTURAL ENGINEERS, INC.
7300 Folsom Blvd., Suite 103
Sacramento, Ca. 95826
(916) 381-8181

REGISTERED PROFESSIONAL ENGINEER
LAWRENCE E. JONES
No. SE 3138
Exp. 12/31/01
STRUCTURAL
STATE OF CALIFORNIA

Essential Services Facility
(UNDER SEPARATE DOCUMENT PACKAGE)
Parking Garage

KEY PLAN

DATE	NO.	DESCRIPTION
1/13/00	3	Overall Permit Set
11/15/99	2	Progress Set
10/18/99	1	Progress Set

REVISIONS

DRAWN BY
JMB

CHECKED BY
DTE

Parking Garage
City of Stockton, California
FOUNDATION RE-DESIGN SET

DRAWING
8th Floor Framing Plan (East)
-

PROJECT NO. 98113
CADFILE -
DATE 07 SEPTEMBER 1999

DRAWING NO. S2.10G

F:\98\98200\Garage\S2_10.dwg 01/17/00 11:45 96 MARK A. R.

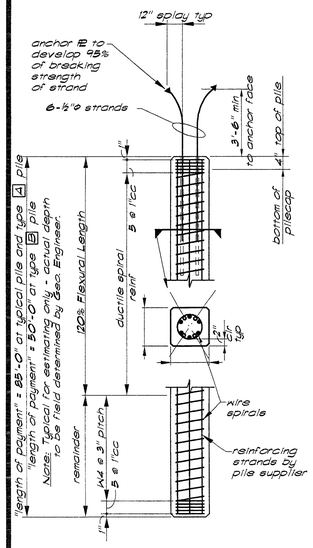

Pile Notes:

1. Use ½"ø ASTM 416-68 gr. 270 "Lowlax" strands; f'_s = 268,000 p.s.i. A = .153 in²
2. Intial tension: 28,900 #/strand Effect. Prestress: 830 p.s.i.
3. Concrete strength:
   f'_c = 4,000 psi @ transfer
   f'_c = 7,000 psi @ 28 days for type A piles
   6,500 psi * @ 28 days for typical piles and type B Piles
   * 6,220 psi minimum was allowed on an exception basis only (see RFI log) 2
4. Design load capacities:

Typical 14" # piles	Type A piles	Type B piles
DL = 200k	DL = 200k	DL = 100k
DL+LL = 300k	DL+LL = 300k	DL+LL = 150k
DL+LL+S = 400k	DL+LL+S = 400k	DL+LL+S = 200k
Lateral = 9k	Lateral = 9k	Lateral = 9k
Tension = 80k	Tension = 150k	Tension = 50k
Max moment @ top = 35 k-ft	Max moment @ top = 35 k-ft	Max moment @ top = 35 k-ft
Flexural length = 25 ft	Flexural length = 25 ft	Flexural length = 25 ft

see (2/23.0) for pile to pilecap extension

5. Pile Design Criteria:
   Combine axial load & bending:
   1) 1.4 (D+LS)
   2) 1.4D+1.7L
   3) 0.75D+1.4S
   Ductile ties in accordance w/UBC 1809.5
6. Placement of piles shall conform to the soils report #3190001 by Geomatrix Consultants dated 9/1999, and under the continuous observation by a representative of that firm. Final pile depths to be determined in the field by the Geotechnical Engineer.
7. If pile must be cut off, extend a minimum of 3'-6" of strand into pilecap splayed out to top mat with specified anchor plate
8. Pile extension detail, if required, to be submitted to and approved by Structural Engineer
9. Pre-drilling should be used to clear underground debris. Pre-drill depth should not exceed 10'-0" below bottom of pilecap
10. Provide driving follower to protect steel and strand extended from pile typical

14"# Prestressed Concrete Pile (1/23.0) — ⅜"=1'-0"

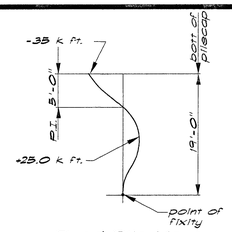

Fixed Pile Moment Diagram

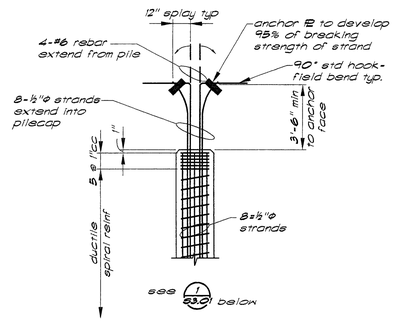

Note: 1. See 1/S3.01 for addn'l notes

Type A Pile Connection Detail (2/23.0) — ⅜"=1'-0"

Typical Pilecap Notes (5/23.0)

1. All pilecaps to have top curtain of #4 at 12"cc each way 3" clear from top of pilecap unc. See detail (1/23.0) Type A & B pilecaps shall have specified reinforcing top and bottom & Type C as noted in details
2. Contractor and Job Inspector shall notify Structural Engineer of any pile not driven in its proper location as shown on drawings so that corrective measures may be taken if required.
3. Where wall occurs across the top or into the side of pilecaps, provide dowels from pilecap same size and spacing as wall reinforcing. Project dowels 40 diameters above pilecap.
4. Bottom mat reinforcing at pilecaps to be 6" clear from bottom of cap. Place longitudinal bars on bottom.
5. Concrete pilecap 28 day strength to be f'_c = 4000 p.s.i. u.n.o.
6. All bottom reinforcing has 180° std hook at each end typical. option to use 90° std hooks at top bars at Type A caps
7. Use typical piles unc. Type A pile caps uses Type A pile where noted on details. Type B pile caps uses Type B pile. Type C & D pile caps uses a typical pile. See plan for special location.

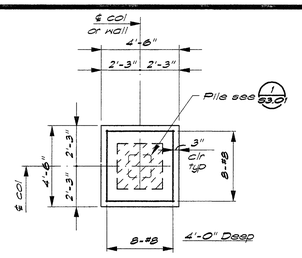

1 One Pile Cap (3/23.0) — ⅜"=1'-0"

1B Indicates Type B pile-see (1/23.0)

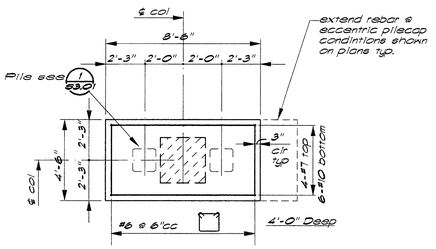

2 Two Pile Cap (4/23.0) — ⅜"=1'-0"

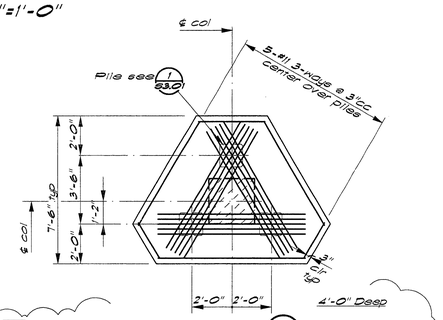

3 Three Pile Cap (6/23.0) — ⅜"=1'-0"

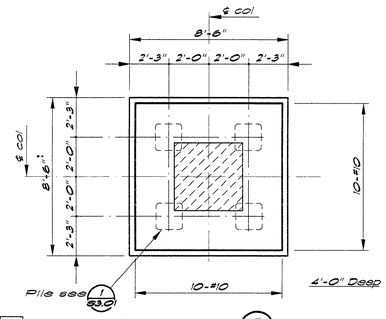

4 Four Pile Cap (7/23.0) — ⅜"=1'-0"

4D Provide specified reinforcing steel top and bottom

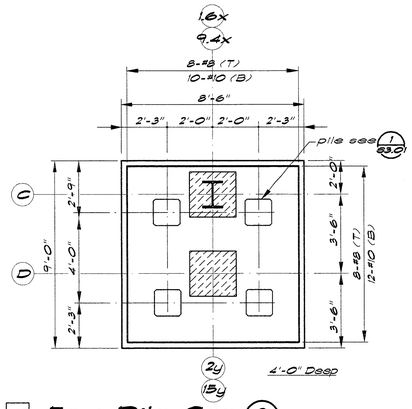

4C Four Pile Cap (8/23.0) — ⅜"=1'-0"

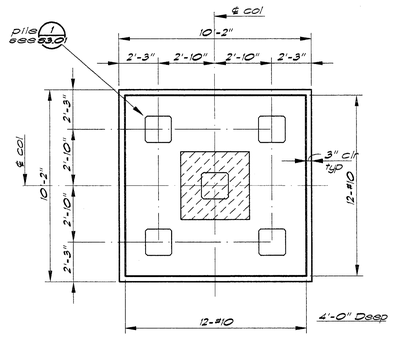

5 Five Pile Cap (9/23.0) — ⅜"=1'-0"

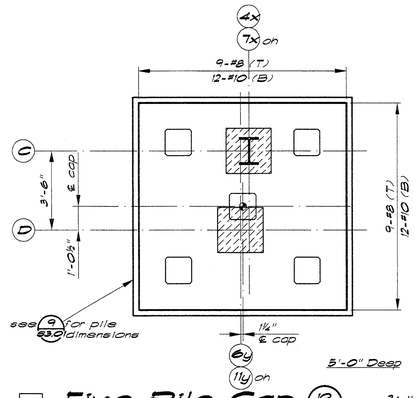

5C Five Pile Cap (10/23.0) — ⅜"=1'-0"

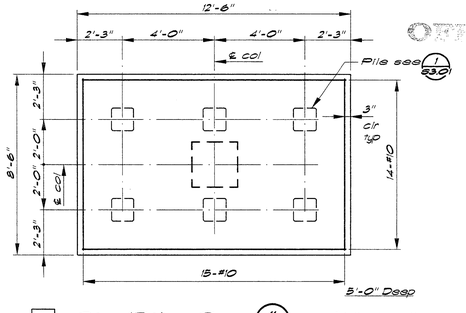

6 Six Pile Cap (11/23.0) — ⅜"=1'-0"

6A Provide Type A pile and use indicated steel top and bottom of pilecap

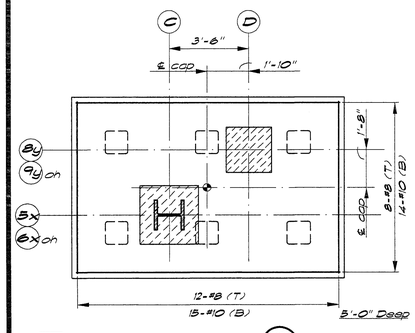

6C Six Pile Cap (12/23.0) — ⅜"=1'-0"

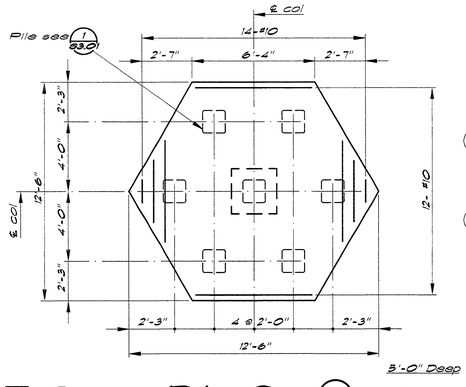

7 Seven Pile Cap (13/23.0) — ⅜"=1'-0"

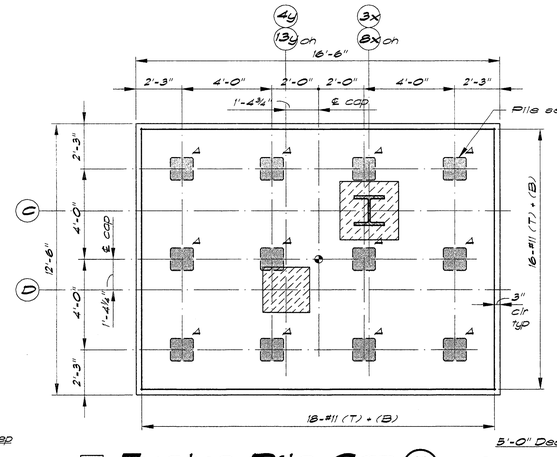

12A Twelve Pile Cap (14/23.0) — ⅜"=1'-0"

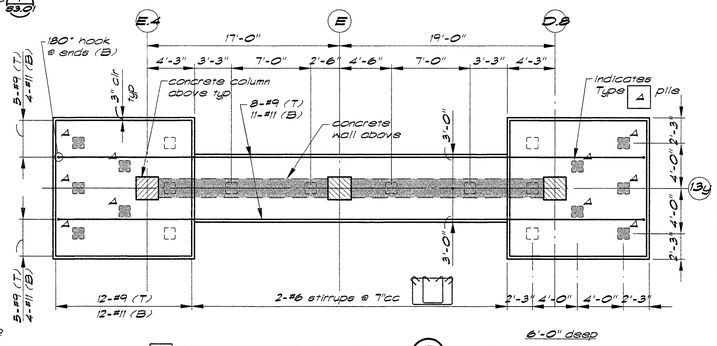

20 Twenty Pile Cap (15/23.0) — 3/16"=1'-0"

PLANS REVIEWED BY
Precision Inspection Company
Inspection and Consulting Services
Page 36 Of 99

This set of plans and Calculations MUST be kept on the job at all times while construction for Building Inspection, City of Stockton.

APPROVED Date

By

This stamp does not relieve the Contractor from the responsibility to permit or to correct any violation of the Ordinances or Law. Compliance with Ordinances or Laws discovered after final approval.

OFFICE COPY

Essential Services Facility (UNDER SEPARATE DOCUMENT PACKAGE)

Parking Garage

KEY PLAN

ENGLISH HARPER RETA
ARCHITECTS

580 UNIVERSITY AVENUE SUITE 100
SACRAMENTO, CA 95825 (916) 568-1821

THIS DRAWING IS NOT FINAL OR TO BE USED FOR CONSTRUCTION UNTIL IT IS SIGNED BY THE ARCHITECT AND THE OWNER.

ARCHITECT
EDWARD P. ENGLISH C-10399
RICHARD L. HARPER C-13830
RONALD A. RETA C- 9879

OWNER

CONTRACTOR

Turner Construction Company

BUEHLER & BUEHLER ASSOCIATES
STRUCTURAL ENGINEERS, INC.
7300 Folsom Blvd., Suite 103
Sacramento, Ca. 95826
(916) 381-8181

REGISTERED PROFESSIONAL ENGINEER LAWRENCE C. JONES No. SE 3138 Exp. 12/31/01 STRUCTURAL STATE OF CALIFORNIA

DATE	NO.	DESCRIPTION
1/13/00	3	Overall Permit Set
11/15/99	2	Progress Set
10/18/99	1	Progress Set

REVISIONS

DRAWN BY
JDO

CHECKED BY
LEJ

Parking Garage
City of Stockton, California
FOUNDATION RE-DESIGN SET

DRAWING
PILE + PILE CAP DETAILS
-

PROJECT NO. 98113
DRAWING NO. S3.01G
CADFILE s3_01.dwg
DATE 24 SEPTEMBER 1999

F:\1998\9800\Garage\S3_01.dwg 01/17/00 13:06 98 Mark A. P.

Column Schedule (S3.02)

Level	C1	C2	C3	C4
8th floor	C1A: add 2-#11; 10-#11; #4 ties @ 4"cc. C1B: 10-#11. 10cc, 3"clr typ	C2A: (14 total) add 2-#11; 12-#11. C2B: add 2-#11; 12-#11. terminator where col. is discontinuous above see note 2.	C3A: 14-#11	C4A: add 2-#11 (14 total); 12-#11. C4B: add 2-#11; 12-#11. C4C: add 2-#11; 12-#11
7th floor				
6th floor				
5th floor	10-#11; 56⌀ lap above 4th flr. 10-#11	12-#11	14-#11	12-#11
4th floor				#4 ties @ 4"cc
3rd floor	10-#11; 56⌀ lap below 4th flr	12-#11	14-#11	12-#11
2nd floor	C1D: 10-#11; #4 ties @ 4"cc			C4D: discontinue @ 3rd floor
T.O. pile cap	10-#11; 3'-0" typ	add 2-#11; 12-#11	14-#11	add 2-#11; 12-#11; 2'-0"
Detail	(2/S3.02); (3/S3.02) @ added	(3/S3.02); (4/S3.02) @ added	(5/S3.02)	(3/S3.02); (4/S3.02) @ added

Note:

1. Use 4000 psi minimum 28 day strength for concrete columns typ.
2. Lenton terminators from ERICO Products, Inc., or equivalent. Terminators must develop 125% of the yield strength of the rebar.
3. Mechanical couplers may be used in lieu of lap splices. Couplers must develop 125% of the yield strength of the rebar and must be located within the middle 1/3 of the column clear height. Couplers used in column type C4 must develop the lesser of 160% of the yield strength of the rebar or 95% of the ultimate strength of the rebar. 50% of the couplers at any column splice must be staggered 24"cc
4. Rebar used for column ties and vertical reinforcing must conform to ASTM A706 or may conform to ASTM A615 if mill certs show that the steel used has 60ksi ≤ Fy < 78ksi and Fu/Fy > 1.25. In any case mill certs shall be submitted.
5. See plans and sections for column locations and top of column elevations.
6. See detail (2/S3.02) for typical column elevation.

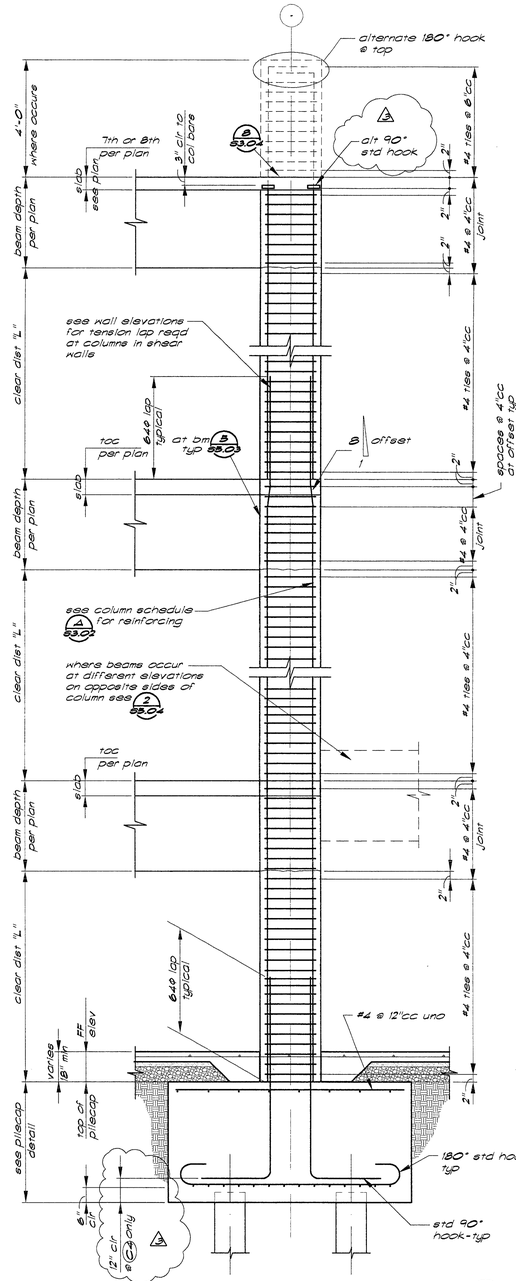

Typical Column Elevation (1/S3.02)

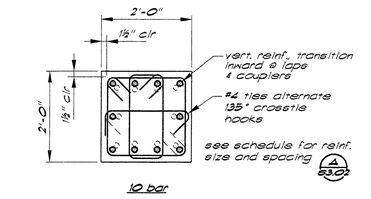

Detail (2/S3.02) — 3/4"=1'-0"

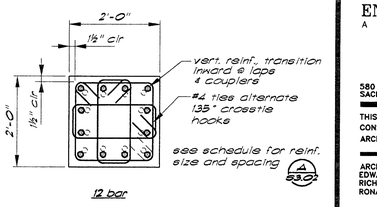

Detail (3/S3.02) — 3/4"=1'-0"

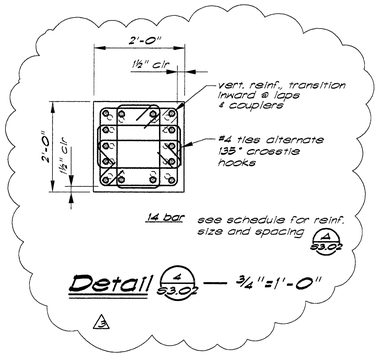

Detail (4/S3.02) — 3/4"=1'-0"

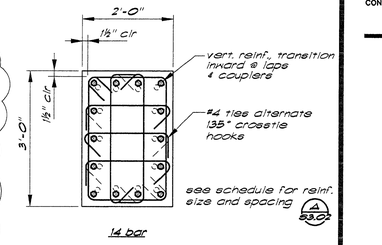

Detail (5/S3.02) — 3/4"=1'-0"

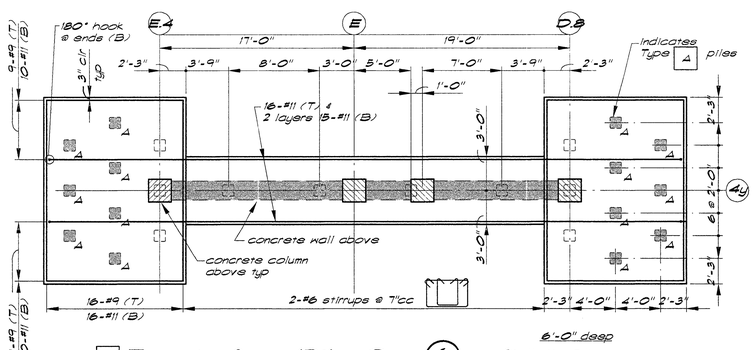

24 Twenty-four Pile Cap (6/S3.02) — 3/16"=1'-0"

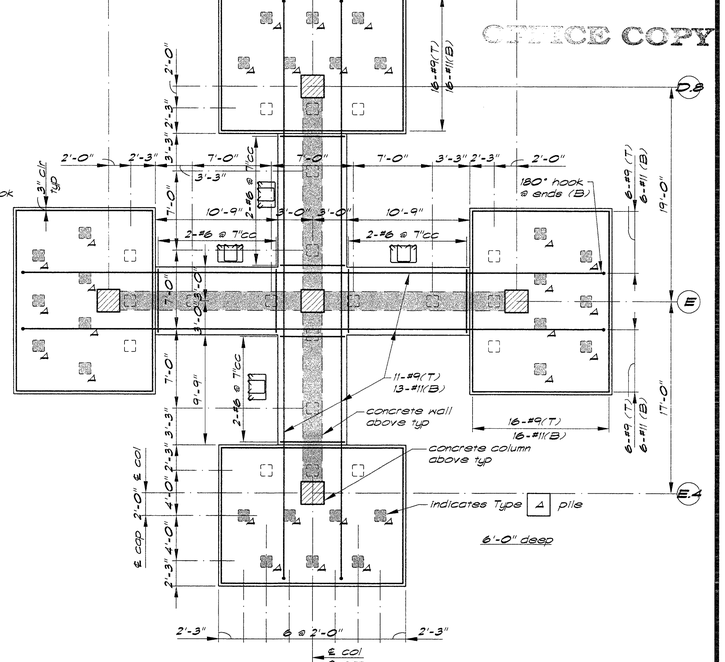

48 Forty-eight Pile Cap (7/S3.02) — 3/16"=1'-0"

This set of plans and calculations MUST be kept on the job at all times and it is unlawful to make any changes or alterations on same without written authorization from the Building Inspector, City of Stockton.

APPROVED
BY _____ DATE _____

PLANS REVIEWED BY
Precision Inspection Company
Inspection and Consulting Services
Page 37 of 184

OFFICE COPY

ENGLISH HARPER RETA
ARCHITECTS

580 UNIVERSITY AVENUE SUITE 100
SACRAMENTO, CA 95825 (916) 568-1821

THIS DRAWING IS NOT FINAL OR TO BE USED FOR CONSTRUCTION UNTIL IT IS SIGNED BY THE ARCHITECT AND THE OWNER.

ARCHITECT
EDWARD P. ENGLISH C-10399
RICHARD L. HARPER C-13830
RONALD A. RETA C- 9879

OWNER

CONTRACTOR

Turner Construction Company

BUEHLER & BUEHLER ASSOCIATES
STRUCTURAL ENGINEERS, INC.
7300 Folsom Blvd., Suite 103
Sacramento, Ca. 95826
(916) 381-8181

REGISTERED PROFESSIONAL ENGINEER LAWRENCE E. JONES No. SE 3138 Exp. 12/31/01 STRUCTURAL STATE OF CALIFORNIA

Essential Services Facility (UNDER SEPARATE DOCUMENT PACKAGE)

Parking Garage

KEY PLAN

DATE	NO.	DESCRIPTION
1/13/00	2	Overall Permit Set
11/15/99	2	Progress Set
10/18/99	1	Progress Set

REVISIONS
DRAWN BY JDO
CHECKED BY LEJ

Parking Garage
City of Stockton, California
FOUNDATION RE-DESIGN SET

DRAWING
COLUMN SCHEDULE AND PILECAPS

PROJECT NO. 98113
DRAWING NO. S3.02G
CADFILE S3_02.dwg
DATE 24 SEPTEMBER 1999

F:\1998\98300\Dwg\S3_02.dwg 01/17/00 13:33 98 Mark A. R.

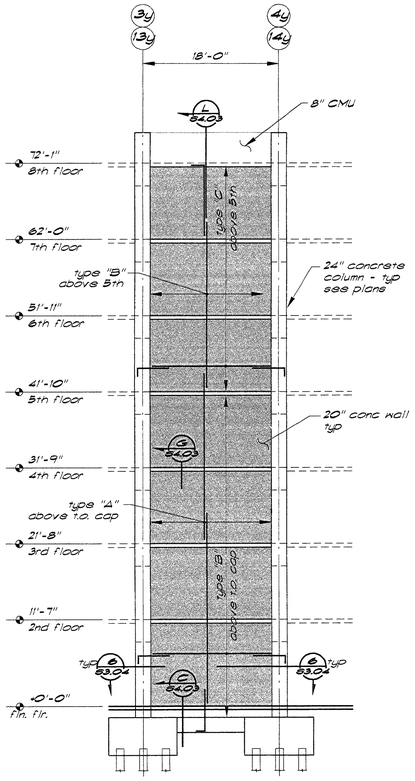

Note: Shading indicates 30 day delay shotcrete placing after post-tensioning of floor level above wall.

Elevation 1 S3.03 — 1/8"=1'-0"

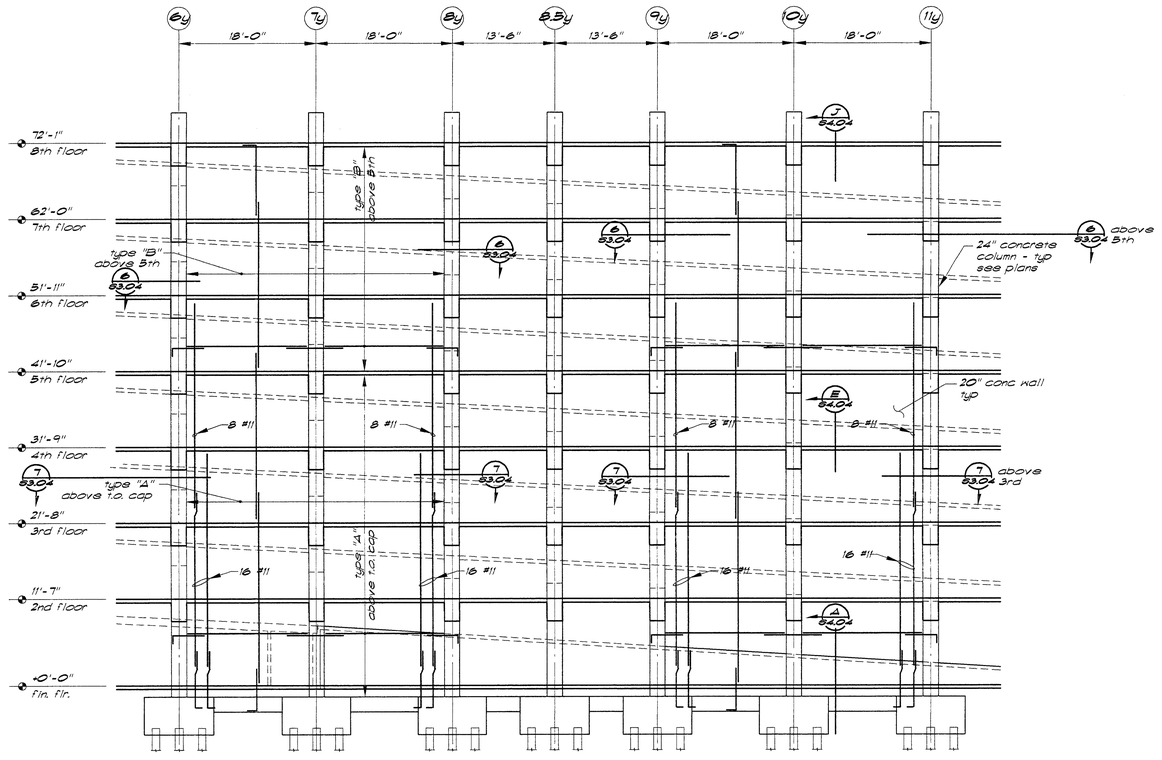

Note: Shading indicates 30 day delay shotcrete placing after post-tensioning of floor level above wall.

Elevation 2 S3.03 — 1/8"=1'-0"

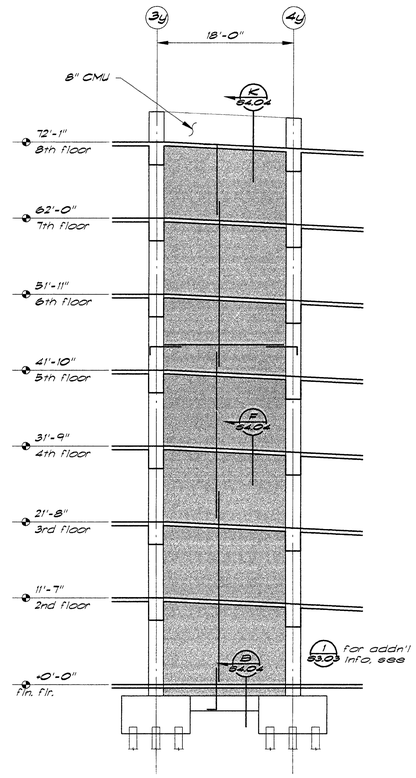

Note: Shading indicates 30 day delay shotcrete placing after post-tensioning of floor level above wall.

Elevation 3 S3.03 — 1/8"=1'-0"

Grade Beam Reinforcing Schedule (4 S3.03)

Mk.	Width	Depth	Top Reinf (Interior)	Bottom Reinf	Ties	Tie Shape
GGB-1	16"	16"	2 - #8	2 - #8	#4 @ 12"cc	
GGB-2	18"	18"	2 - #9	2 - #9	#4 @ 12"cc	
GGB-3	24"	24"	3 - #11	3 - #11	#5 @ 12"cc	
GGB-4	36"	24"	4 - #11	6 - #11	2-#5 @ 12"cc	
GGB-5	48"	36"	10 - #11	10 - #11	2- #5 @ 12"cc	
GGB-6	60"	36"	12 - #11	12 - #11	2- #5 @ 12"cc	

2

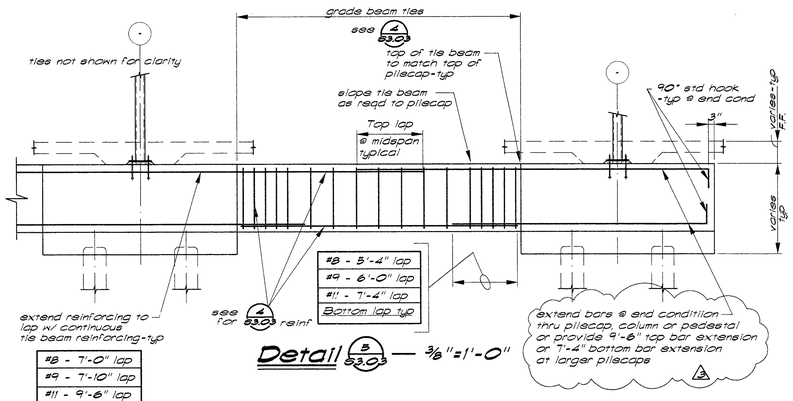

#8 - 7'-0" lap
#9 - 7'-10" lap
#11 - 9'-6" lap
Top lap typical

Detail 5 S3.03 — 3/8"=1'-0"

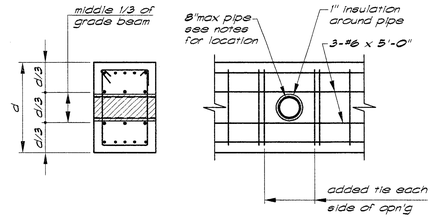

Notes:
1. 8"ø maximum single pipe penetrations with 1" insulation or PVC sleeve with ½" clear.
2. Multiple openings to be spaced no closer than 3d center to center
3. Locate openings in middle 1/3 of grade beam span and in middle 1/3 of grade beam depth.

Typical Grade Beam & Conduit Penetration Detail 6 S3.03 — ½"=1'-0"

This set of plans and calculations MUST be kept on the job at all times and it is unlawful for anyone to make any changes or additions on same without the permission in writing of the Building Inspection Dept. of Stockton.

By _____

This stamping of the plans and specifications shall not be held to permit or to be an approval of the violation of any provisions of any Ordinance or Law. Occupancy or structure not permitted until after final approval.

OFFICE COPY

PLANS REVIEWED BY
Precision Inspection Company
Inspection and Consulting Services
Page 20 of 134

ENGLISH HARPER RETA
ARCHITECTS

580 UNIVERSITY AVENUE SUITE 100
SACRAMENTO, CA 95825 (916) 568-1821

THIS DRAWING IS NOT FINAL OR TO BE USED FOR CONSTRUCTION UNTIL IT IS SIGNED BY THE ARCHITECT AND THE OWNER.

ARCHITECT
EDWARD P. ENGLISH C-10399
RICHARD L. HARPER C-13830
RONALD A. RETA C- 9879

OWNER

CONTRACTOR

Turner Construction Company

BUEHLER & BUEHLER ASSOCIATES
STRUCTURAL ENGINEERS, INC.
7300 Folsom Blvd., Suite 103
Sacramento, Ca. 95826
(916) 381-8181

REGISTERED PROFESSIONAL ENGINEER
LAWRENCE E. JONES
No. SE 3138
Exp. 12/31/01
STRUCTURAL
STATE OF CALIFORNIA

Essential Services Facility (UNDER SEPARATE DOCUMENT PACKAGE)
Parking Garage

KEY PLAN

DATE	NO.	DESCRIPTION
1/13/00	3	Overall Permit Set
11/15/99	2	Progress Set
10/18/99	1	Progress Set

REVISIONS

DRAWN BY
HLC

CHECKED BY
LEJ

Parking Garage
City of Stockton, California
FOUNDATION RE-DESIGN SET

DRAWING
WALL ELEVATIONS
-
-

PROJECT NO. 98113
DRAWING NO. S3.03G
CADFILE S3_03.dwg
DATE 07 SEPTEMBER 1999

F:\98000\000\Concept\S3_03.dwg 01/17/00 12:00 98 Mark A. R.

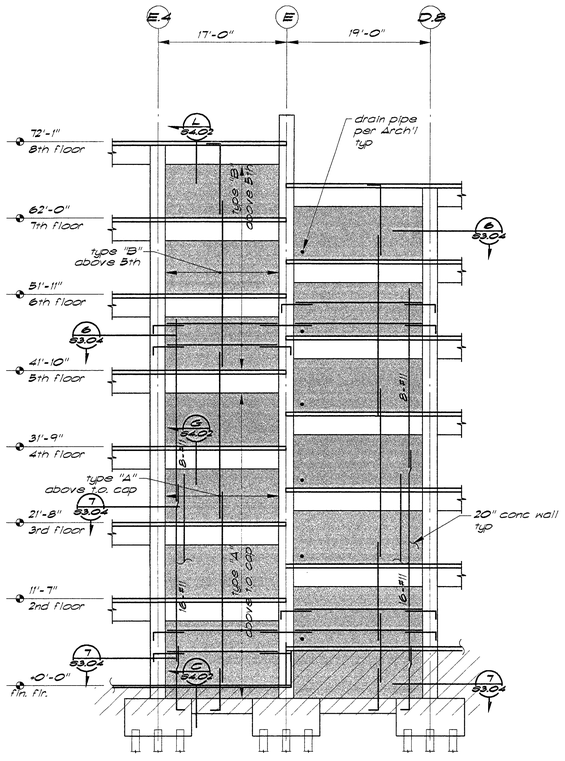

Note: Shading indicates 30 day delay shotcrete placing after post-tensioning of floor level above wall.

Elevation 1/S3.04 — 1/8"=1'-0"

Wall Reinforcing Schedule (△ S3.04)

Type	horiz.	vert.
A	#7 @ 10" cc 2 curtain	#6 @ 12" cc 2 curtain
B	#6 @ 11" cc 2 curtain	#5 @ 12" cc 2 curtain
C	#5 @ 12" cc 2 curtain	#5 @ 16" cc 2 curtain

Notes:
1. Use 4000 psi min 28 day strength for concrete shear walls typ.
2. Lap wall reinf. 58 ø typ.
3. Mechanical couplers may be used in lieu of lap splices. Couplers must develop the lesser of 160% of the yield strength of the rebar or 95% of the ultimate strength of the rebar.
4. Rebar must conform to ASTM A706 or may be ASTM A615 per △ S3.04 note 4.

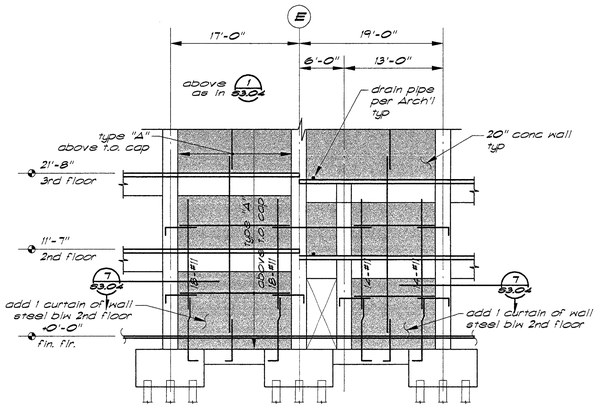

Note: Shading indicates 30 day delay shotcrete placing after post-tensioning of floor level above wall.

Elevation 2/S3.04 — 1/8"=1'-0"

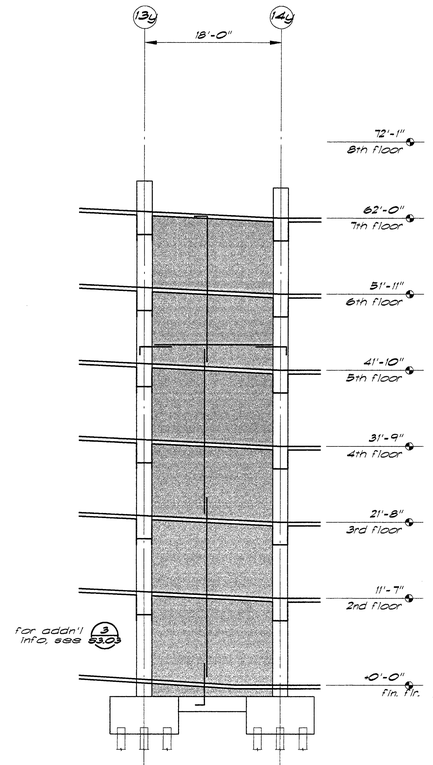

Note: Shading indicates 30 day delay shotcrete placing after post-tensioning of floor level above wall.

Elevation 3/S3.04 — 1/8"=1'-0"

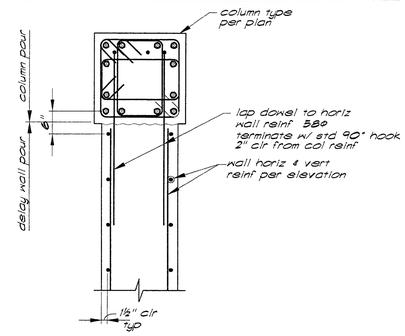

Detail e/S3.04 — 3/4"=1'-0"

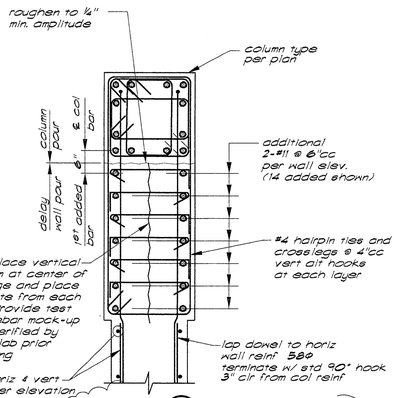

Note: place vertical studform at center of wall cage and place shotcrete from each side. Provide test panel rebar mock-up to be verified by testing lab prior to placing

Detail 7/S3.04 — 3/4"=1'-0"

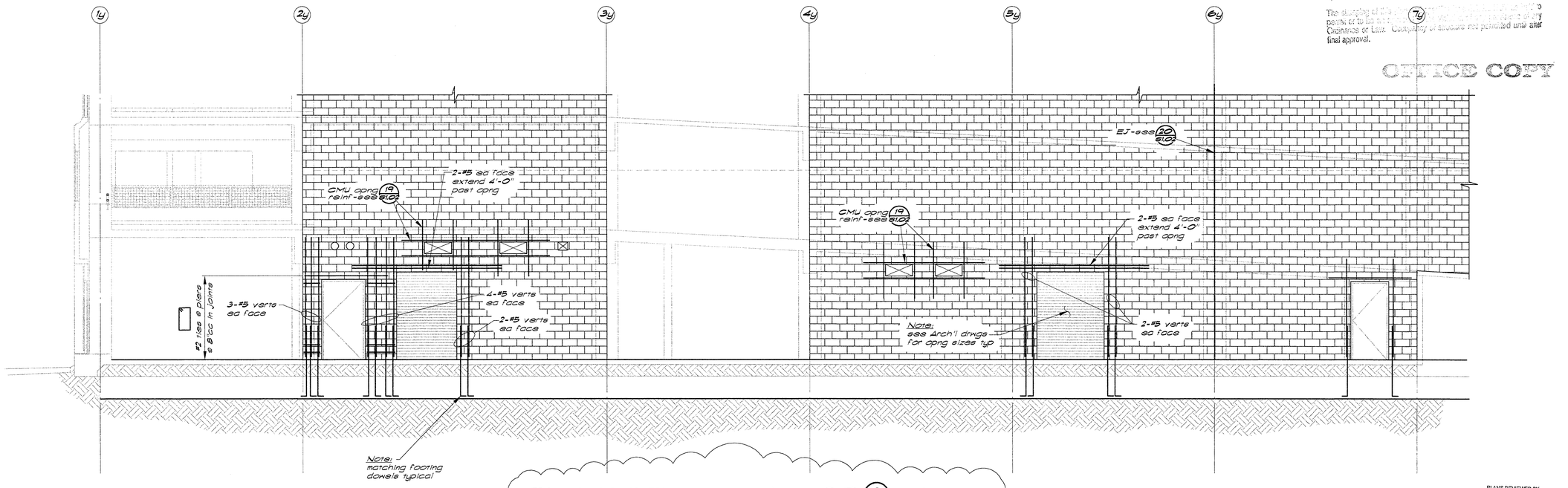

Block Wall Elevation @ Line C/D e/S3.04 — ¼"=1'-0" △2

This set of plans and calculations MUST be kept on the job at all times and it is unlawful to make changes or additions thereto ... without written permission ... Building Inspector ...

By _____

The issuing of a permit ... shall not be construed to be a permit for ... any violation of any Ordinance or Law. Occupancy of structure not permitted until after final approval.

OFFICE COPY

PLANS REVIEWED BY
Precision Inspection Company
Inspection and Consulting Services
Page 39 of 119

ENGLISH HARPER RETA
ARCHITECTS

580 UNIVERSITY AVENUE SUITE 100
SACRAMENTO, CA 95825 (916) 568-1821

THIS DRAWING IS NOT FINAL OR TO BE USED FOR CONSTRUCTION UNTIL IT IS SIGNED BY THE ARCHITECT AND THE OWNER.

ARCHITECT
EDWARD P. ENGLISH C-10399
RICHARD L. HARPER C-13830
RONALD A. RETA C- 9879

OWNER

CONTRACTOR

Turner Construction Company

BUEHLER & BUEHLER ASSOCIATES
STRUCTURAL ENGINEERS, INC.
7300 Folsom Blvd., Suite 103
Sacramento, Ca. 95826
(916) 381-8181

REGISTERED PROFESSIONAL ENGINEER
LAWRENCE E. JONES
No. SE 3158
Exp. 12/31/01
STRUCTURAL
STATE OF CALIFORNIA

Essential Services Facility (UNDER SEPARATE DOCUMENT PACKAGE)

Parking Garage

KEY PLAN

DATE	NO.	DESCRIPTION
1/13/00	3	Overall Permit Set
11/15/99	2	Progress Set
10/18/99	1	Progress Set

REVISIONS

DRAWN BY
JDO

CHECKED BY
LEJ

Parking Garage
City of Stockton, California
FOUNDATION RE-DESIGN SET

DRAWING
WALL ELEVATIONS
-
-

PROJECT NO. 98113
DRAWING NO. S3.04G
CADFILE S3_04.dwg
DATE 07 SEPTEMBER 1999

P:\1998\8005\Dwg\s3_04.dwg 01/17/00 12:33 By: Mark A. R.

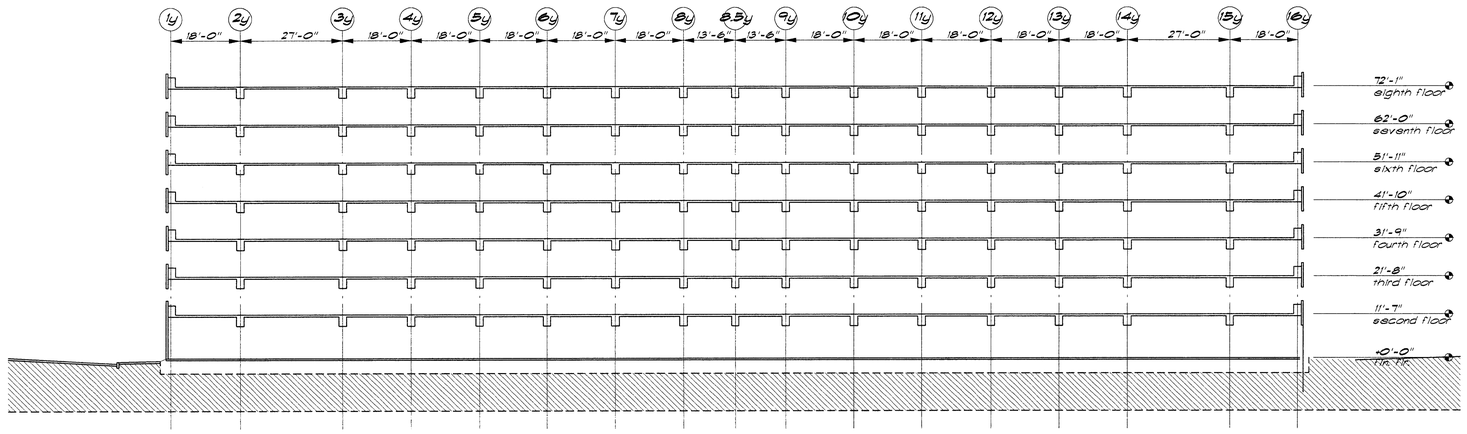

Section A/S4.01 — 1/16"=1'-0"

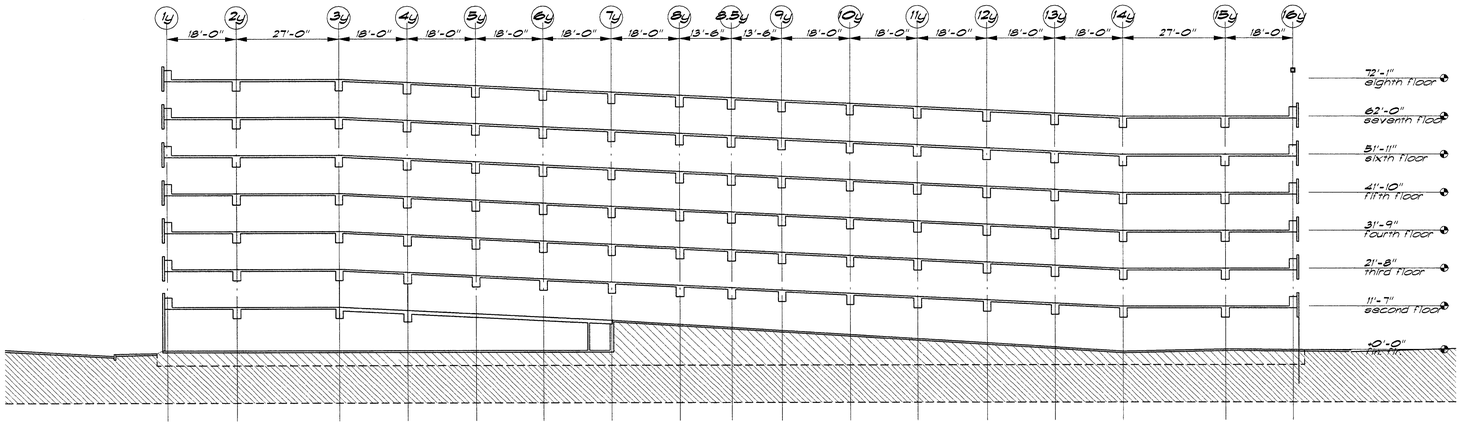

Section B/S4.01 — 1/16"=1'-0"

This set of plans and calculations MUST be kept on the job at all times and it is unlawful to make any changes or alterations on same [illegible] written permission from Building Inspection, City of Stockton.
APPROVED Date
By

The stamping of this plan and specifications [illegible] be made a permit or to be an approval of the violation of any provisions of any Ordinance or Law. Occupancy of structure not permitted until after final approval.

OFFICE COPY

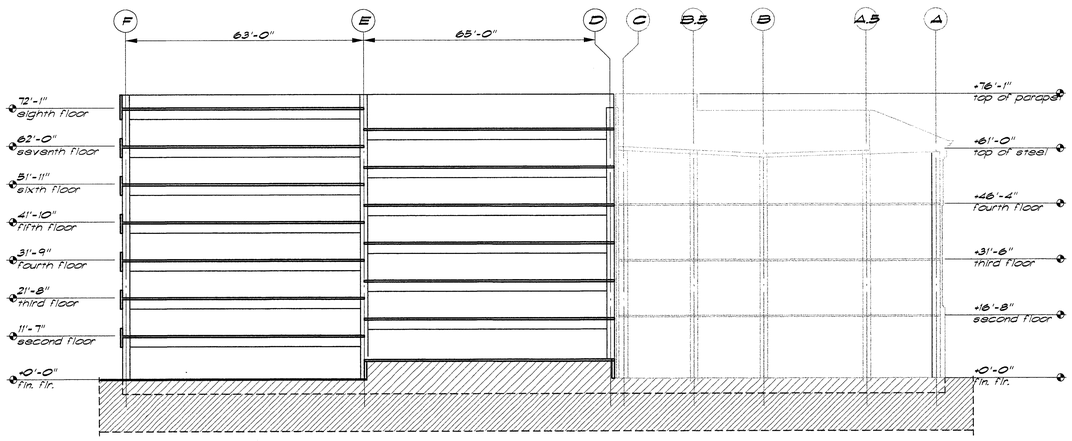

Section C/S4.01 — 1/16"=1'-0"

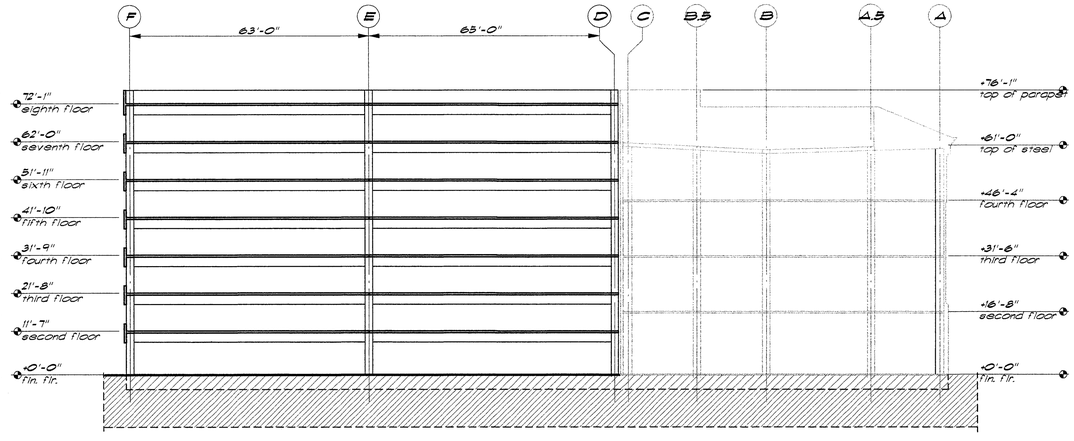

Section D/S4.01 — 1/16"=1'-0"

PLANS REVIEWED BY
Precision Inspection Company
Inspection and Consulting Services
Page 40 of 79

ENGLISH HARPER RETA
ARCHITECTS

580 UNIVERSITY AVENUE SUITE 100
SACRAMENTO, CA 95825 (916) 568-1821

THIS DRAWING IS NOT FINAL OR TO BE USED FOR CONSTRUCTION UNTIL IT IS SIGNED BY THE ARCHITECT AND THE OWNER.

ARCHITECT
EDWARD P. ENGLISH C-10399
RICHARD L. HARPER C-13830
RONALD A. RETA C- 9879

OWNER

CONTRACTOR

Turner Construction Company

BUEHLER & BUEHLER ASSOCIATES
STRUCTURAL ENGINEERS, INC.
7300 Folsom Blvd., Suite 103
Sacramento, Ca. 95826
(916) 381-8181

REGISTERED PROFESSIONAL ENGINEER
LAWRENCE E. JONES
No. SE 3138
Exp. 12/31/01
STRUCTURAL
STATE OF CALIFORNIA

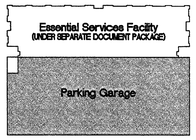

KEY PLAN

DATE	NO.	DESCRIPTION
1/13/00	3	Overall Permit Set
11/15/99	2	Progress Set
10/18/99	1	Progress Set

REVISIONS

DRAWN BY
MAR

CHECKED BY
LEJ

Parking Garage
City of Stockton, California
FOUNDATION RE-DESIGN SET

DRAWING
SECTIONS
-
-

PROJECT NO. 98113
DRAWING NO. S4.01G
CADFILE S4_01.dwg
DATE 07 SEPTEMBER 1999